09/08/99

PROJECT: BP8.R021

CONTRACT:

See Sheet 1A For Index of Sheets

STATE OF NORTH CAROLINA
DIVISION OF HIGHWAYS

STATE	STATE PROJECT REFERENCE NO.	SHEET NO.	TOTAL SHEETS
N.C.	BP8.R021	1	

STATE PROJ. NO.	F. A. PROJ. NO.	DESCRIPTION
BP8.R021.1		P.E.
BP8.R021.2		R/W & Utilities
BP8.R021.3		Construction

MOORE & MONTGOMERY COUNTIES

LOCATION: BRIDGE 620026 OVER DROWNING CREEK ON SR 1124/SR 1531 (DERBY ROAD)

TYPE OF WORK: GRADING, DRAINAGE, PAVING & STRUCTURES

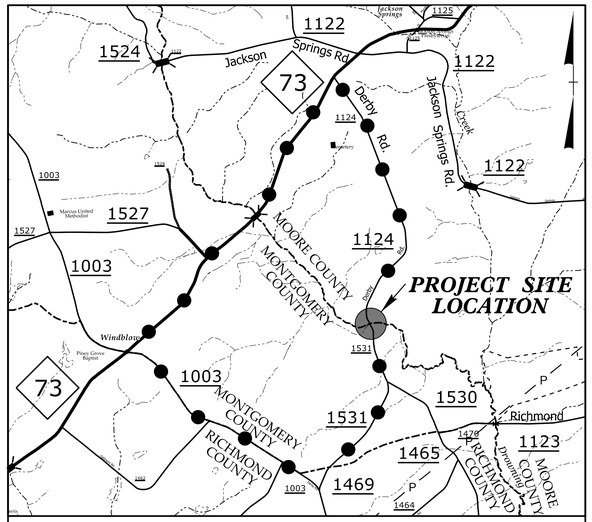

VICINITY MAP

OFF-SITE DETOUR ROUTE

N.T.S.

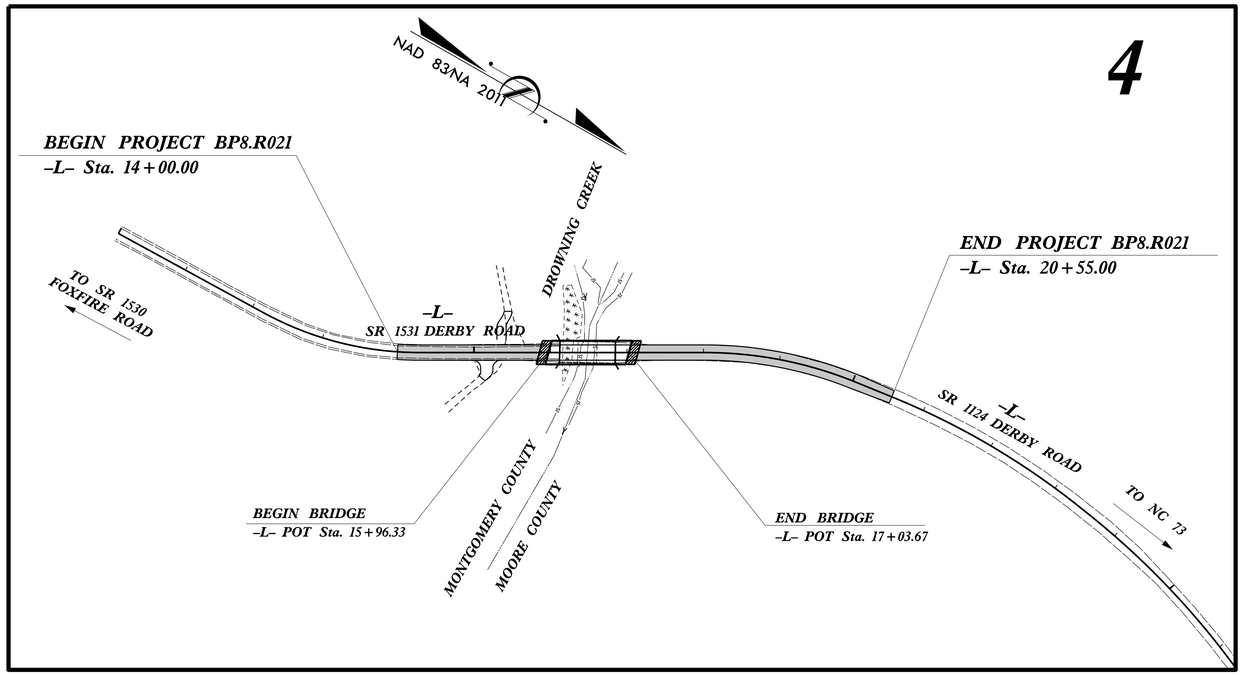

DOCUMENT NOT CONSIDERED FINAL UNLESS ALL SIGNATURES COMPLETED

GRAPHIC SCALES

50 0 50 100
PLANS

50 0 50 100
PROFILE (HORIZONTAL)

10 0 10 20
PROFILE (VERTICAL)

DESIGN DATA

ADT 2015 = 210
ADT 2040 = 420
K = %
D = %
T = 6 % *
V = 50 MPH
* TTST = DUAL
FUNC CLASS = LOCAL
SUBREGIONAL TIER

PROJECT LENGTH

LENGTH ROADWAY PROJECT BP8.R021	=	0.104 mi
LENGTH STRUCTURE PROJECT BP8.R021	=	0.020 mi
TOTAL LENGTH OF PROJECT BP8.R021	=	0.124 mi

PLANS PREPARED BY:
Pennoni
PENNONI ASSOCIATES INC.
5430 WADE PARK BLVD., SUITE 106, RALEIGH, NC 27607
(919) 929-1173 NC LICENSE #F-1267

2024 STANDARD SPECIFICATIONS

RIGHT OF WAY DATE:
AUGUST 24, 2023

LETTING DATE:
MARCH 25, 2025

PLANS PREPARED FOR:
DIVISION OF HIGHWAYS
DIVISION 8
121 DOT Drive
Carthage, NC 28327

BRIAN A. WILES, PE
PROJECT ENGINEER

TIM WELCH, PE
NCDOT CONTACT
DIV 8 BRIDGE PROGRAM MANAGER

HYDRAULICS ENGINEER
ME ENGINEERING
1011 SCHAUB DRIVE, SUITE 100
RALEIGH, NC 27606
(919) 851-6606
FIRM PE NUMBER | P-0671
1/2/2025
DocuSigned by: Andrew Nottingham
SIGNATURE:
NORTH CAROLINA PROFESSIONAL SEAL 18533 ENGINEER A. T. NOTTINGHAM
P.E.

ROADWAY DESIGN ENGINEER
1/2/2025
Signed by: Brian A Wiles
SIGNATURE:
NORTH CAROLINA PROFESSIONAL SEAL 16689 ENGINEER BRIAN ALLEN WILES
P.E.

STATE OF NORTH CAROLINA DEPARTMENT OF TRANSPORTATION

12/30/2024
R:\Roadway\Proj\620026_Rdy_tsh.dgn
USERNAME

8/17/99

Pennoni
PENNONI ASSOCIATES INC.
5430 WADE PARK BLVD., SUITE 106,
RALEIGH, NC 27607
(919) 929-1173 NC LICENSE #F-1267

PROJECT REFERENCE NO.	SHEET NO.
BP8.R021	1A

ROADWAY DESIGN ENGINEER
2/7/2025
NORTH CAROLINA PROFESSIONAL SEAL 16689 ENGINEER BRIAN ALLEN WILES
Signature: Brian Wiles
8B9DDDE43E3A4DE...

DOCUMENT NOT CONSIDERED FINAL UNLESS ALL SIGNATURES COMPLETED

INDEX OF SHEETS

GENERAL NOTES:

2024 SPECIFICATIONS
EFFECTIVE: 01-16-2024
REVISED:

GRADE LINE:
GRADING AND SURFACING:

THE GRADE LINES SHOWN DENOTE THE FINISHED ELEVATION OF THE PROPOSED SURFACING AT GRADE POINTS SHOWN ON THE TYPICAL SECTIONS. GRADE LINES MAY BE ADJUSTED AT THEIR BEGINNING AND ENDING AND AT STRUCTURES AS DIRECTED BY THE ENGINEER IN ORDER TO SECURE A PROPER TIE-IN.

CLEARING:

CLEARING ON THIS PROJECT SHALL BE PERFORMED TO THE LIMITS ESTABLISHED BY METHOD III.

SUPERELEVATION:

ALL CURVES ON THIS PROJECT SHALL BE SUPERELEVATED IN ACCORDANCE WITH STD. NO. 225.04 USING THE RATE OF SUPERELEVATION AND RUNOFF SHOWN ON THE PLANS. SUPERELEVATION IS TO BE REVOLVED ABOUT THE GRADE POINTS SHOWN ON THE TYPICAL SECTIONS.

SHOULDER CONSTRUCTION:

ASPHALT, EARTH, AND CONCRETE SHOULDER CONSTRUCTION ON THE HIGH SIDE OF SUPERELEVATED CURVES SHALL BE IN ACCORDANCE WITH STD. NO. 560.01.

SIDE ROADS:

THE CONTRACTOR WILL BE REQUIRED TO DO ALL NECESSARY WORK TO PROVIDE SUITABLE CONNECTIONS WITH ALL ROADS, STREETS, AND DRIVES ENTERING THIS PROJECT. THIS WORK WILL BE PAID FOR AT THE CONTRACT UNIT PRICE FOR THE PARTICULAR ITEMS INVOLVED.

GUARDRAIL:

THE GUARDRAIL LOCATIONS SHOWN ON THE PLANS MAY BE ADJUSTED DURING CONSTRUCTION AS DIRECTED BY THE ENGINEER. THE CONTRACTOR SHOULD CONSULT WITH THE ENGINEER PRIOR TO ORDERING GUARDRAIL MATERIAL.

TEMPORARY SHORING:

SHORING REQUIRED FOR THE MAINTENANCE OF TRAFFIC WILL BE PAID FOR AS "EXTRA WORK" IN ACCORDANCE WITH SECTION 104-7.

END BENTS:

THE ENGINEER SHALL CHECK THE STRUCTURE END BENT PLANS, DETAILS, AND CROSS-SECTION PRIOR TO SETTING OF THE SLOPE STAKES FOR THE EMBANKMENT OR EXCAVATION APPROACHING A BRIDGE.

UTILITIES:

UTILITY OWNERS ON THIS PROJECT ARE Pee Dee EMC - Power and Brightspeed - Communications.

ANY RELOCATION OF EXISTING UTILITIES WILL BE ACCOMPLISHED BY OTHERS.

RIGHT-OF-WAY MARKERS:

ALL RIGHT-OF-WAY MARKERS ON THIS PROJECT SHALL BE PLACED BY CONTRACT.

ROCK:

ROCK IS ANTICIPATED BETWEEN 17+80 AND 19+00 RIGHT. BLASTING MAY BE REQUIRED FOR EXCAVATION ON THE PROJECT. SEE SECTION 220 OF THE STANDARD SPECIFICATIONS AND IF APPLICABLE, ROCK BLASTING PROVISION.

EFF. 01-16-2024
REV.

2024 ROADWAY ENGLISH STANDARD DRAWINGS

The following Roadway Standards as appear in "Roadway Standard Drawings" Highway Design Branch - N. C. Department of Transportation - Raleigh, N. C., Dated January 16, 2024 are applicable to this project and by reference hereby are considered a part of these plans:

STD.NO.	TITLE
DIVISION 2 - EARTHWORK	
200.03	Method of Clearing - Method III
225.02	Guide for Grading Subgrade - Secondary and Local
225.04	Method of Obtaining Superelevation - Two Lane Pavement
DIVISION 3 - PIPE CULVERTS	
300.01	Method of Pipe Installation (Use Details in Lieu of Standards for Sheets 1 and 2 of 2)
DIVISION 4 - MAJOR STRUCTURES	
423.01	Bridge Approach Fills - Type 1 Approach Fill for Bridge Abutment
DIVISION 5 - SUBGRADE, BASES AND SHOULDERS	
560.01	Method of Shoulder Construction - High Side of Superelevated Curve - Method I
DIVISION 6 - ASPHALT BASES AND PAVEMENTS	
654.01	Pavement Repairs
DIVISION 8 - INCIDENTALS	
806.01	Concrete Right-of-Way Marker
806.02	Granite Right-of-Way Marker
815.02	Subsurface Drain
840.00	Concrete Base Pad for Drainage Structures
840.25	Anchorage for Frames - Brick or Concrete or Precast
840.29	Frames and Narrow Slot Flat Grates
840.35	Traffic Bearing Grated Drop Inlet - for Cast Iron Double Frame and Grates
840.46	Traffic Bearing Precast Drainage Structure
840.66	Drainage Structure Steps
846.01	Concrete Curb, Gutter and Curb & Gutter
846.02	Drop Inlet Installation in Expresway Gutter
846.04	Drop Inlet Installation in Shoulder Berm Gutter
862.01	Guardrail Placement (Use Details in Lieu of Standards for Sheets 4, 6, 12, and 14 of 15)
862.02	Guardrail Installation
862.03	Structure Anchor Units (Use Detail in Lieu of Standrard for Sheet 8 of 9)
876.02	Guide for Rip Rap at Pipe Outlets
876.04	Drainage Ditches with Class 'B' Rip Rap

2/7/2025
R:\Roadway\Proj\6200026_Rdy_tsh_01A.dgn
ILEWAGE

9/10/2021

PROJECT REFERENCE NO.	SHEET NO.
BP8.R021	1B

STATE OF NORTH CAROLINA, DIVISION OF HIGHWAYS

CONVENTIONAL PLAN SHEET SYMBOLS

Note: Not to Scale

BOUNDARIES AND PROPERTY:

- State Line
- County Line
- Township Line
- City Line
- Reservation Line
- Property Line
- Existing Iron Pin (EIP)
- Computed Property Corner
- Existing Concrete Monument (ECM)
- Parcel/Sequence Number
- Existing Fence Line
- Proposed Woven Wire Fence
- Proposed Chain Link Fence
- Proposed Barbed Wire Fence
- Existing Wetland Boundary
- Proposed Wetland Boundary
- Existing Endangered Animal Boundary
- Existing Endangered Plant Boundary
- Existing Historic Property Boundary
- Known Contamination Area: Soil
- Potential Contamination Area: Soil
- Known Contamination Area: Water
- Potential Contamination Area: Water
- Contaminated Site: Known or Potential

BUILDINGS AND OTHER CULTURE:

- Gas Pump Vent or U/G Tank Cap
- Sign
- Well
- Small Mine
- Foundation
- Area Outline
- Cemetery
- Building
- School
- Church
- Dam

HYDROLOGY:

- Stream or Body of Water
- Hydro, Pool or Reservoir
- Jurisdictional Stream
- Buffer Zone 1
- Buffer Zone 2
- Flow Arrow
- Disappearing Stream
- Spring
- Wetland
- Proposed Lateral, Tail, Head Ditch
- False Sump

RAILROADS:

- Standard Gauge
- RR Signal Milepost
- Switch
- RR Abandoned
- RR Dismantled

RIGHT OF WAY & PROJECT CONTROL:

- Primary Horiz Control Point
- Primary Horiz and Vert Control Point
- Secondary Horiz and Vert Control Point
- Vertical Benchmark
- Existing Right of Way Monument
- Proposed Right of Way Monument (Rebar and Cap)
- Proposed Right of Way Monument (Concrete)
- Existing Permanent Easement Monument
- Proposed Permanent Easement Monument (Rebar and Cap)
- Existing C/A Monument
- Proposed C/A Monument (Rebar and Cap)
- Proposed C/A Monument (Concrete)
- Existing Right of Way Line
- Proposed Right of Way Line
- Existing Control of Access Line
- Proposed Control of Access Line
- Proposed ROW and CA Line
- Existing Easement Line
- Proposed Temporary Construction Easement
- Proposed Temporary Drainage Easement
- Proposed Permanent Drainage Easement
- Proposed Permanent Drainage/Utility Easement
- Proposed Permanent Utility Easement
- Proposed Temporary Utility Easement
- Proposed Aerial Utility Easement

ROADS AND RELATED FEATURES:

- Existing Edge of Pavement
- Existing Curb
- Proposed Slope Stakes Cut
- Proposed Slope Stakes Fill
- Proposed Curb Ramp
- Existing Metal Guardrail
- Proposed Guardrail
- Existing Cable Guiderail
- Proposed Cable Guiderail
- Equality Symbol
- Pavement Removal

VEGETATION:

- Single Tree
- Single Shrub
- Hedge
- Woods Line
- Orchard
- Vineyard

EXISTING STRUCTURES:

MAJOR:

- Bridge, Tunnel or Box Culvert
- Bridge Wing Wall, Head Wall and End Wall

MINOR:

- Head and End Wall
- Pipe Culvert
- Footbridge
- Drainage Box: Catch Basin, DI or JB
- Paved Ditch Gutter
- Storm Sewer Manhole
- Storm Sewer

UTILITIES:

** SUE – Subsurface Utility Engineering*
LOS – Level of Service – A,B,C or D (Accuracy)

POWER:

- Existing Power Pole
- Proposed Power Pole
- Existing Joint Use Pole
- Proposed Joint Use Pole
- Power Manhole
- Power Line Tower
- Power Transformer
- U/G Power Cable Hand Hole
- H–Frame Pole
- U/G Power Line Test Hole (SUE – LOS A)*
- U/G Power Line (SUE – LOS B)*
- U/G Power Line (SUE – LOS C)*
- U/G Power Line (SUE – LOS D)*

TELEPHONE:

- Existing Telephone Pole
- Proposed Telephone Pole
- Telephone Manhole
- Telephone Pedestal
- Telephone Cell Tower
- U/G Telephone Cable Hand Hole
- U/G Telephone Test Hole (SUE – LOS A)*
- U/G Telephone Cable (SUE – LOS B)*
- U/G Telephone Cable (SUE – LOS C)*
- U/G Telephone Cable (SUE – LOS D)*
- U/G Telephone Conduit (SUE – LOS B)*
- U/G Telephone Conduit (SUE – LOS C)*
- U/G Telephone Conduit (SUE – LOS D)*
- U/G Fiber Optics Cable (SUE – LOS B)*
- U/G Fiber Optics Cable (SUE – LOS C)*
- U/G Fiber Optics Cable (SUE – LOS D)*

WATER:

- Water Manhole
- Water Meter
- Water Valve
- Water Hydrant
- U/G Water Line Test Hole (SUE – LOS A)*
- U/G Water Line (SUE – LOS B)*
- U/G Water Line (SUE – LOS C)*
- U/G Water Line (SUE – LOS D)*
- Above Ground Water Line

TV:

- TV Pedestal
- TV Tower
- U/G TV Cable Hand Hole
- U/G TV Test Hole (SUE – LOS A)*
- U/G TV Cable (SUE – LOS B)*
- U/G TV Cable (SUE – LOS C)*
- U/G TV Cable (SUE – LOS D)*
- U/G Fiber Optic Cable (SUE – LOS B)*
- U/G Fiber Optic Cable (SUE – LOS C)*
- U/G Fiber Optic Cable (SUE – LOS D)*

GAS:

- Gas Valve
- Gas Meter
- U/G Gas Line Test Hole (SUE – LOS A)*
- U/G Gas Line (SUE – LOS B)*
- U/G Gas Line (SUE – LOS C)*
- U/G Gas Line (SUE – LOS D)*
- Above Ground Gas Line

SANITARY SEWER:

- Sanitary Sewer Manhole
- Sanitary Sewer Cleanout
- U/G Sanitary Sewer Line
- Above Ground Sanitary Sewer
- SS Force Main Line Test Hole (SUE – LOS A)*
- SS Force Main Line (SUE – LOS B)*
- SS Force Main Line (SUE – LOS C)*
- SS Force Main Line (SUE – LOS D)*

MISCELLANEOUS:

- Utility Pole
- Utility Pole with Base
- Utility Located Object
- Utility Traffic Signal Box
- Utility Unknown U/G Line (SUE – LOS B)*
- U/G Tank; Water, Gas, Oil
- Underground Storage Tank, Approx. Loc.
- A/G Tank; Water, Gas, Oil
- Geoenvironmental Boring
- Abandoned According to Utility Records — AATUR
- End of Information — E.O.I.

6/2/99

PROJECT REFERENCE NO.	SHEET NO.
BP8.R021	2A-1

ROADWAY DESIGN ENGINEER

1/2/2025

NORTH CAROLINA PROFESSIONAL SEAL 16689 ENGINEER BRIAN ALLEN WILES

Signed by: Brian Allen Wiles

DocuSign Envelope ID: 6B8C0D7-E4E3-4C9E

PAVEMENT DESIGN ENGINEER

DOCUMENT NOT CONSIDERED FINAL UNLESS ALL SIGNATURES COMPLETED

Pennoni

PENNONI ASSOCIATES INC.
5430 WADE PARK BLVD., SUITE 106,
RALEIGH, NC 27607
(919) 929-1173 NC LICENSE #F-1267

PAVEMENT SCHEDULE

C1	PROP. APPROX. 1½" ASPHALT CONCRETE SURFACE COURSE, TYPE S9.5B, AT AN AVERAGE RATE OF 165 LBS. PER SQ. YD.
C2	PROP. APPROX. 3" ASPHALT CONCRETE SURFACE COURSE, TYPE S9.5B, AT AN AVERAGE RATE OF 165 LBS. PER SQ. YD. IN EACH OF TWO LAYERS.
C3	PROP. VAR. DEPTH ASPHALT CONCRETE SURFACE COURSE, TYPE S9.5B, AT AN AVERAGE RATE OF 110 LBS. PER SQ. YD. PER 1" DEPTH. TO BE PLACED IN LAYERS NOT TO EXCEED 2" IN DEPTH.
D1	PROP. APPROX. 4" ASPHALT CONCRETE INTERMEDIATE COURSE, TYPE I19.0C, AT AN AVERAGE RATE OF 456 LBS. PER SQ. YD.
D2	PROP. VAR. DEPTH ASPHALT CONCRETE INTERMEDIATE COURSE, TYPE I19.0C, AT AN AVERAGE RATE OF 114 LBS. PER SQ. YD. PER 1" DEPTH, TO BE PLACED IN LAYERS NOT LESS THAN 2½" IN DEPTH OR GREATER THAN 4" IN DEPTH.
E1	PROP. APPROX. 4" ASPHALT CONCRETE BASE COURSE, TYPE B25.0C, AT AN AVERAGE RATE OF 456 LBS. PER SQ. YD.
E2	PROP. VAR. DEPTH ASPHALT CONCRETE BASE COURSE, TYPE B25.0C, AT AN AVERAGE RATE OF 114 LBS. PER SQ. YD. PER 1" DEPTH. TO BE PLACED IN LAYERS NOT LESS THAN 3" IN DEPTH OR GREATER THAN 5½" IN DEPTH.
R1	SHOULDER BERM GUTTER
R2	EXPRESSWAY GUTTER
T	EARTH MATERIAL.
U	EXISTING PAVEMENT.
W	VARIABLE DEPTH ASPHALT PAVEMENT (SEE STANDARD WEDGING DETAIL THIS SHEET)

NOTE: PAVEMENT EDGE SLOPES ARE 1:1 UNLESS SHOWN OTHERWISE.

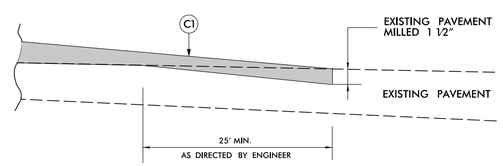

Incidental Milling Existing Pavement

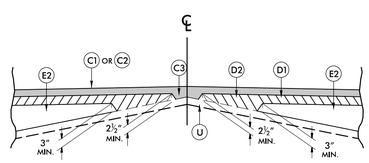

Detail Showing Method of Wedging

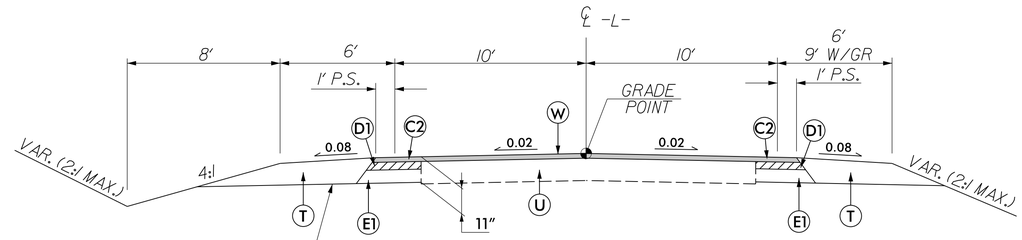

TYPICAL SECTION NO. 1

-L- STA 14+00.00 TO -L- STA 15+50.00
-L- STA 17+50.00 TO -L- STA 20+55.00

-L- STA 14+00.00 TO -L- STA 14+25.00 LEFT
TIE PROPOSED SHOULDER GRADING TO EXISTING SLOPE
(SEE CROSS SECTIONS)

-L- STA 14+25.00 TO -L- STA 14+75.00 LEFT
TRANSITION TO FULL GRADED SECTION AT 14+75

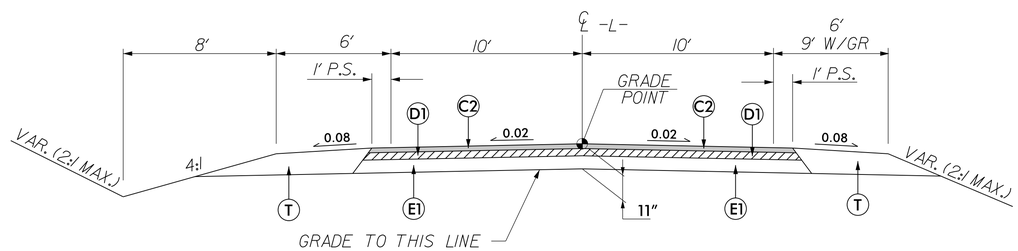

TYPICAL SECTION NO. 2

-L- STA 15+50.00 TO -L- STA 15+96.33 (BEGIN BRIDGE)
-L- STA 17+03.67 (END BRIDGE) TO -L- STA 17+50.00

12/30/2024
R:\Roadway\Proj\6200026_Rdy_typ.dgn
USERNAME

6/2/99

PAVEMENT SCHEDULE	
C1	1½" S9.5B
C2	3" S9.5B
C3	VAR. S9.5B
D1	4" I19.5C
D2	VAR. I19.0C
E1	4" B25.0C
E2	VAR. B25.0C
R1	SBG
R2	EXP. GUTTER
T	EARTH MATERIAL
U	EXIST. PAVEMENT
W	WEDGING

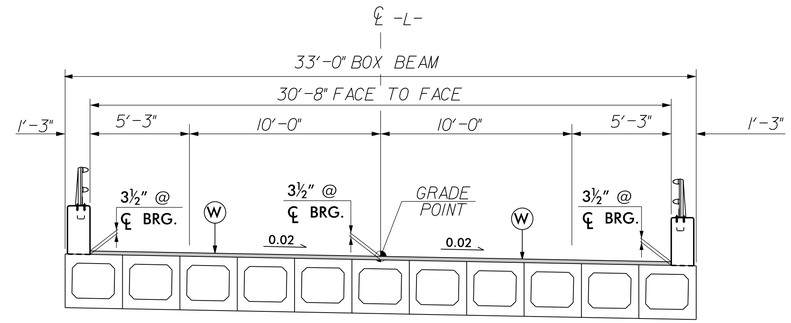

TYPICAL SECTION NO. 3
-L- STA 15+96.33 TO -L- STA 17+03.67

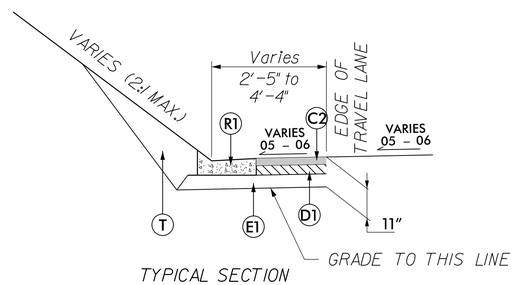

TYPICAL SECTION
FOR SHOULDER BERM GUTTER
LEFT SIDE 14+00 to 14+43.2

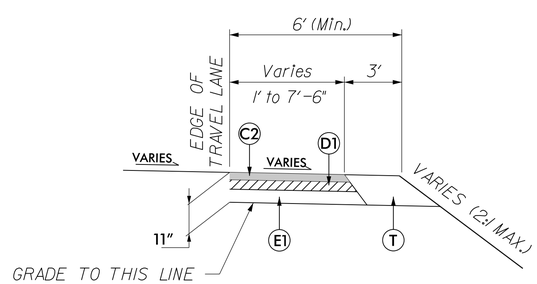

TYPICAL SECTION
FOR PAVED SHOULDER

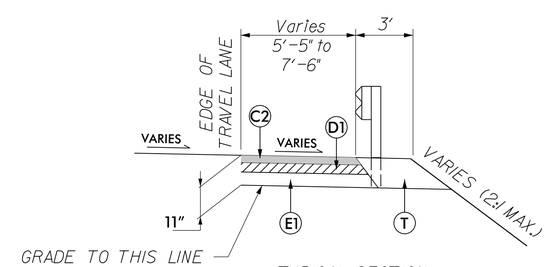

TYPICAL SECTION
FOR PAVED SHOULDER
w/ GUARDRAIL

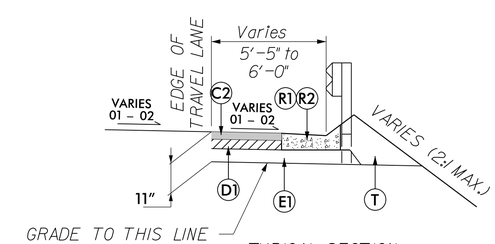

TYPICAL SECTION
FOR EXPRESSWAY GUTTER
OR SHOULDER BERM GUTTER

PROJECT REFERENCE NO.	SHEET NO.
BP8.R021	2A-2

ROADWAY DESIGN ENGINEER
12/30/2025
NORTH CAROLINA PROFESSIONAL SEAL 16689 ENGINEER BRIAN ALLEN WILES
Signed by:
Brian A Wiles
DEBOODF4DE3ADE...

PAVEMENT DESIGN ENGINEER

DOCUMENT NOT CONSIDERED FINAL UNLESS ALL SIGNATURES COMPLETED

Pennoni

PENNONI ASSOCIATES INC.
5430 WADE PARK BLVD., SUITE 106,
RALEIGH, NC 27607
(919) 929-1173 NC LICENSE #F-1267

12/30/2024
R:\Roadway\Proj\6200026_Rdy_typ.dgn
cgrimes

PROJECT REFERENCE NO.	SHEET NO.
BP8.R021	2C-1

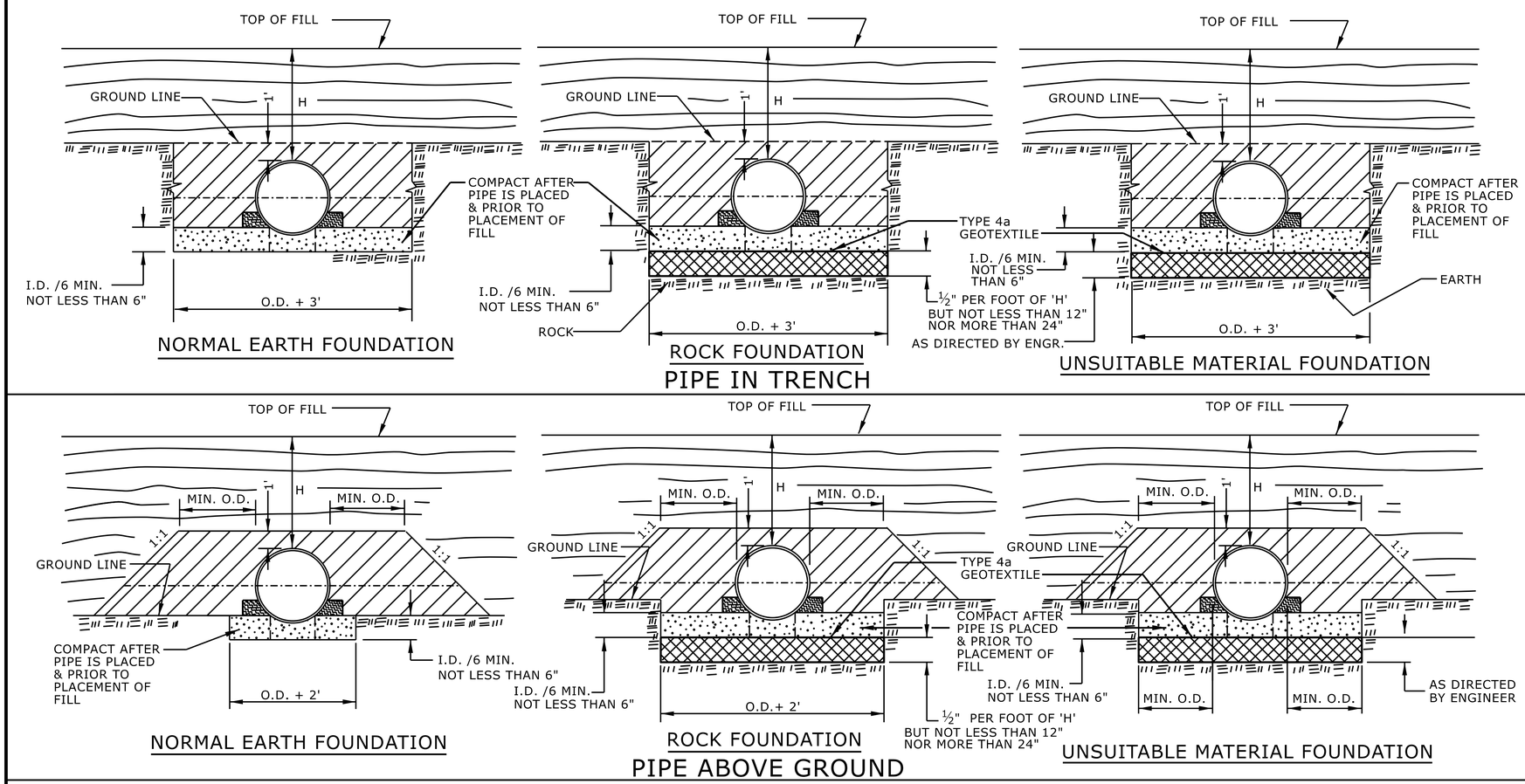

GENERAL NOTES:

I.D. = THE MAXIMUM HORIZONTAL INSIDE DIAMETER DIMENSION.

O.D. = THE MAXIMUM HORIZONTAL OUTSIDE DIAMETER DIMENSION.

H = THE FILL HEIGHT MEASURED VERTICALLY AT ANY POINT ALONG THE PIPE FROM THE TOP OF THE PIPE TO THE TOP OF THE EMBANKMENT AT THAT POINT.

APPROVED SUITABLE LOCAL MATERIAL.

TAKE CARE TO FULLY COMPACT HAUNCH ZONE OF PIPE BACKFILL.

LOOSELY PLACED SELECT MATERIAL CLASS III OR CLASS II, TYPE 1 FOR PIPE BEDDING. LEAVE SECTION DIRECTLY BENEATH PIPE UNCOMPACTED AS PIPE SEATING AND BACKFILL WILL ACCOMPLISH COMPACTION.

DO NOT OPERATE HEAVY EQUIPMENT OVER ANY PIPE CULVERT UNTIL THE PIPE CULVERT HAS BEEN PROPERLY BACKFILLED AND COVERED WITH AT LEAST 3 FEET OF APPROVED MATERIAL.

REFER TO NCDOT PIPE MATERIAL SELECTION GUIDE AND STANDARD SPECIFICATIONS FOR ALLOWABLE PIPE FILL HEIGHTS AND PIPE SPECIFICATIONS.

SPRINGLINE OF PIPE

SELECT BACKFILL MATERIAL CLASS III OR CLASS II, TYPE 1 ABOVE AND BELOW SPRINGLINE.

UNDISTURBED EARTH MATERIAL

SELECT MATERIAL CLASS V OR VI FOR FOUNDATION CONDITIONING. ENCAPSULATE WITH TYPE IV GEOTEXTILE AS DIRECTED BY THE ENGINEER.

STATE OF NORTH CAROLINA
DEPT. OF TRANSPORTATION
DIVISION OF HIGHWAYS
RALEIGH, N.C.

ROADWAY DETAIL DRAWING FOR

METHOD OF PIPE INSTALLATION

FLEXIBLE PIPE

SHEET 1 OF 2

300.01

NORTH CAROLINA PROFESSIONAL SEAL 033144 ENGINEER NICOLE M. HACKLER

Signed by: Nicole M. Hackler
5884323D34164C5...
1/2/2025

DOCUMENT NOT CONSIDERED FINAL UNLESS ALL SIGNATURES COMPLETED

CONTRACTS STANDARDS AND DEVELOPMENT UNIT
Office 919-707-6950 FAX 919-250-4119

SEE TITLE BLOCK

ORIGINAL BY: S.CALHOUN DATE: 7-25-2024
MODIFIED BY: DATE:
CHECKED BY: DATE:
FILE SPEC.:

PROJECT REFERENCE NO.	SHEET NO.
BP8.R021	2C-2

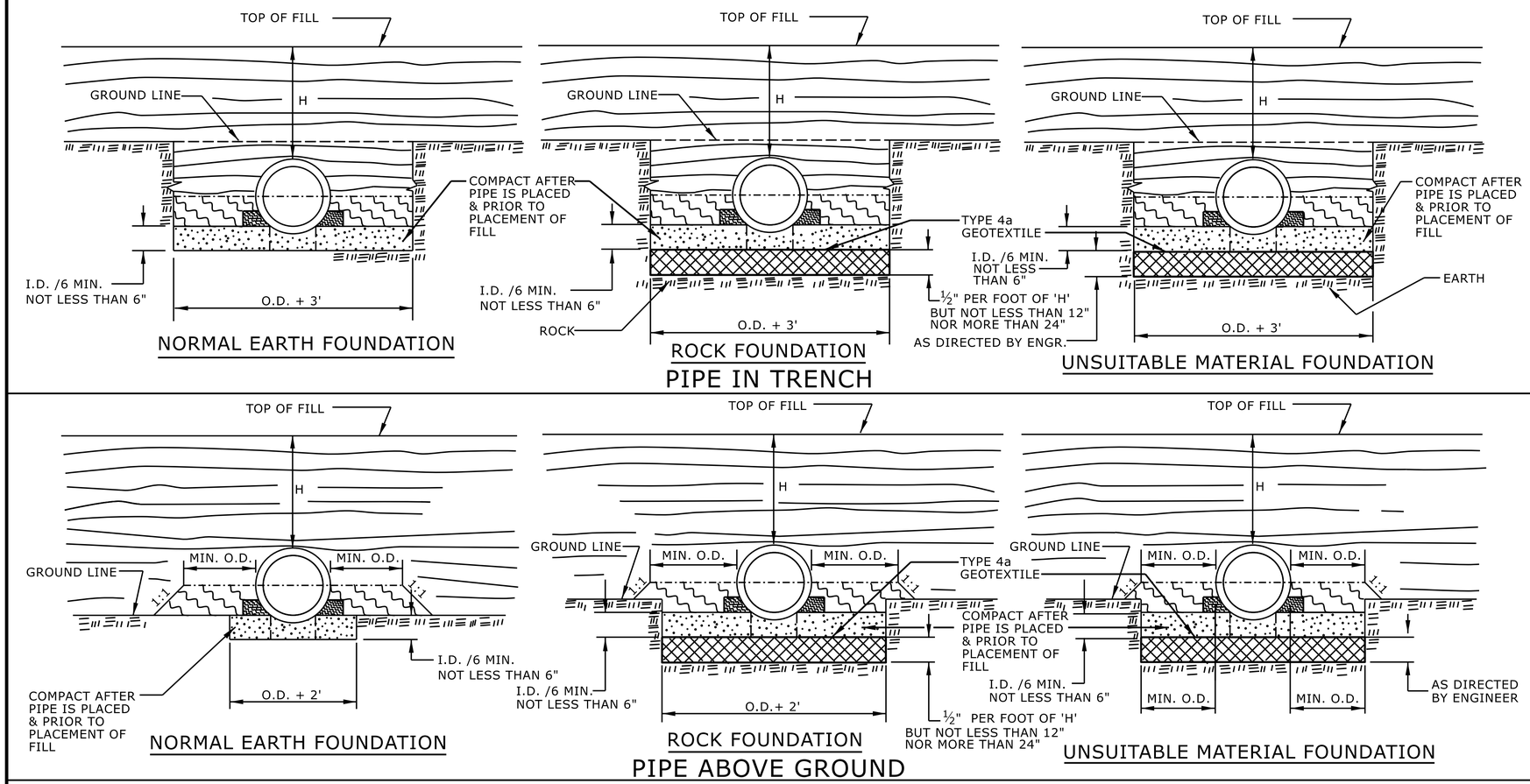

GENERAL NOTES:

I.D. = THE MAXIMUM HORIZONTAL INSIDE DIAMETER DIMENSION.

O.D. = THE MAXIMUM HORIZONTAL OUTSIDE DIAMETER DIMENSION.

H = THE FILL HEIGHT MEASURED VERTICALLY AT ANY POINT ALONG THE PIPE FROM THE TOP OF THE PIPE TO THE TOP OF THE EMBANKMENT AT THAT POINT.

APPROVED SUITABLE LOCAL MATERIAL.

TAKE CARE TO FULLY COMPACT HAUNCH ZONE OF PIPE BACKFILL.

LOOSELY PLACED SELECT MATERIAL CLASS III OR CLASS II, TYPE 1 FOR PIPE BEDDING. LEAVE SECTION DIRECTLY BENEATH PIPE UNCOMPACTED AS PIPE SEATING AND BACKFILL WILL ACCOMPLISH COMPACTION.

DO NOT OPERATE HEAVY EQUIPMENT OVER ANY PIPE CULVERT UNTIL THE PIPE CULVERT HAS BEEN PROPERLY BACKFILLED AND COVERED WITH AT LEAST 3 FEET OF APPROVED MATERIAL.

REFER TO NCDOT PIPE MATERIAL SELECTION GUIDE AND STANDARD SPECIFICATIONS FOR ALLOWABLE PIPE FILL HEIGHTS AND PIPE SPECIFICATIONS.

SPRINGLINE OF PIPE

SELECT BACKFILL MATERIAL CLASS III OR CLASS II, BELOW SPRINGLINE.

UNDISTURBED EARTH MATERIAL

SELECT MATERIAL CLASS V OR VI FOR FOUNDATION CONDITIONING. ENCAPSULATE WITH TYPE IV GEOTEXTILE AS DIRECTED BY THE ENGINEER.

STATE OF NORTH CAROLINA
DEPT. OF TRANSPORTATION
DIVISION OF HIGHWAYS
RALEIGH, N.C.

ROADWAY DETAIL DRAWING FOR

METHOD OF PIPE INSTALLATION

RIGID PIPE

NORTH CAROLINA PROFESSIONAL SEAL 033144 ENGINEER NICOLE M. HACKLER

Signed by: Nicole M. Hackler
5884323D34164C6...
1/2/2025

SHEET 2 OF 2

300.01

DOCUMENT NOT CONSIDERED FINAL UNLESS ALL SIGNATURES COMPLETED

CONTRACTS STANDARDS AND DEVELOPMENT UNIT
Office 919-707-6950 FAX 919-250-4119

SEE TITLE BLOCK

ORIGINAL BY:	S.CALHOUN	DATE:	7-25-2024
MODIFIED BY:		DATE:	
CHECKED BY:		DATE:	
FILE SPEC.:			

PROJECT REFERENCE NO.	SHEET NO.
BP8.R021	2C-3

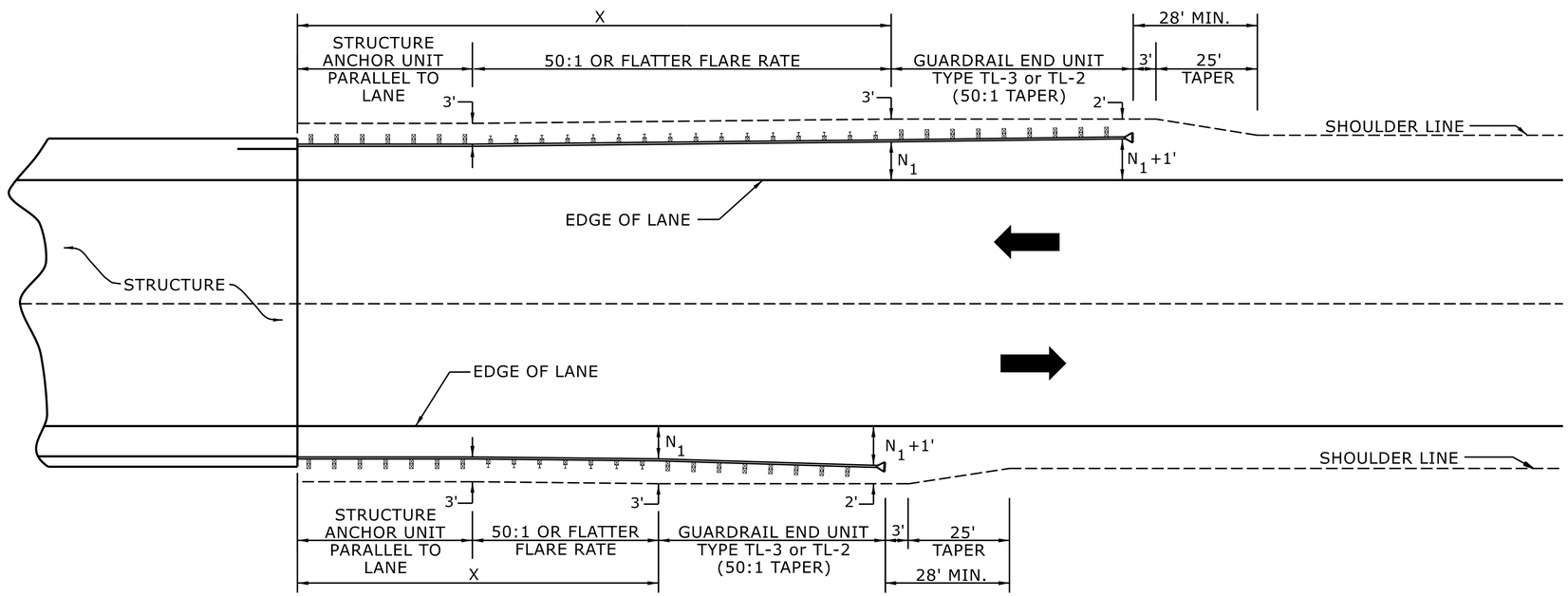

USE FLARE RATE AS THE CONTROL IF THE "N_1" DISTANCE IS NOT OBTAINED.
("N_1" IS BASED ON SHOULDER WIDTHS IN THE ROADWAY DESIGN MANUAL)

SEE STD. 862.03 FOR STRUCTURE ANCHOR UNITS

FOR POSTED SPEEDS ≥ 45MPH USE GREU TYPE TL-3
FOR POSTED SPEEDS < 45MPH USE GREU TYPE TL-2

GUARDRAIL LENGTH OF NEED (X) IS CALCULATED BASED ON THE AASHTO ROADSIDE DESIGN GUIDE.

LENGTHS AND OFFSETS FOR PROPOSED GUARDRAIL AT TWO LANE - TWO WAY LOCATIONS

STATE OF NORTH CAROLINA
DEPT. OF TRANSPORTATION
DIVISION OF HIGHWAYS
RALEIGH, N.C.

ROADWAY DETAIL DRAWING FOR
GUARDRAIL PLACEMENT

NORTH CAROLINA PROFESSIONAL SEAL 033144 ENGINEER NICOLE M. HACKLER

Signed by: Nicole M. Hackler
5884323D34164C6...
1/2/2025

SHEET 4 OF 15
862D01

DOCUMENT NOT CONSIDERED FINAL UNLESS ALL SIGNATURES COMPLETED

CONTRACTS STANDARDS AND DEVELOPMENT UNIT
Office 919-707-6950 FAX 919-250-4119

SEE TITLE BLOCK

ORIGINAL BY: S.CALHOUN DATE: 7-25-2024
MODIFIED BY: DATE:
CHECKED BY: DATE:
FILE SPEC.:

PROJECT REFERENCE NO.	SHEET NO.
BP8.R021	2C-4

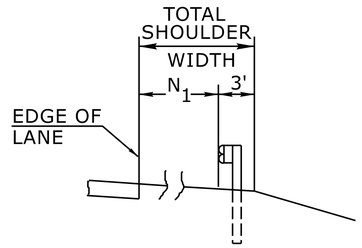

FILL SECTION

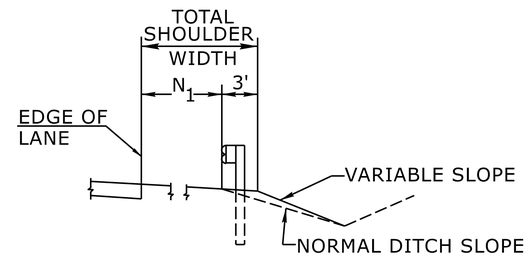

CUT SECTION

"N_1"= DISTANCE FROM EDGE OF LANE TO FACE OF GUARDRAIL WHERE GUARDRAIL IS PARALLEL TO LANE.

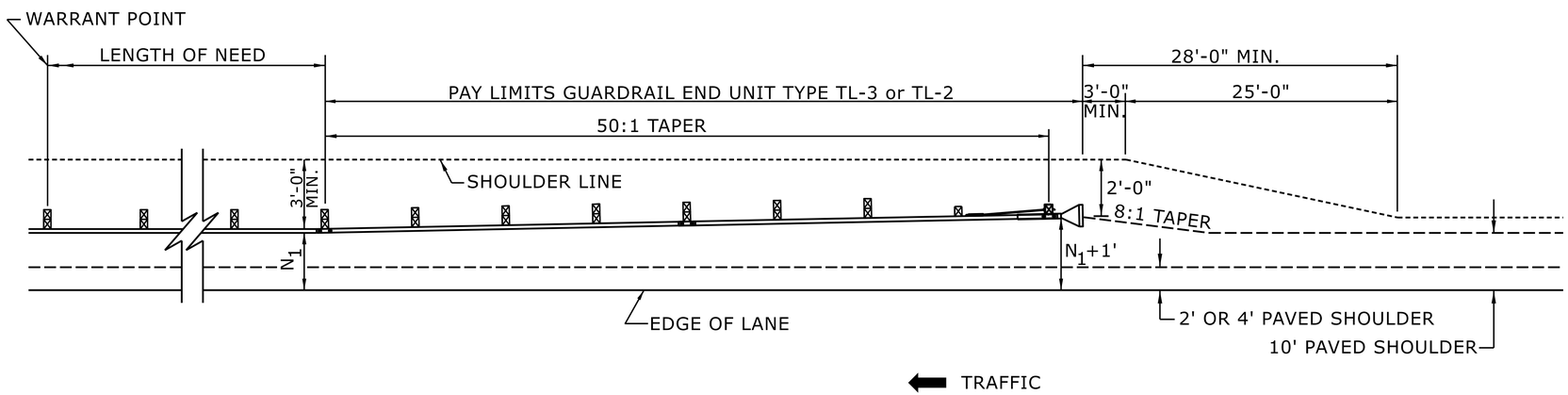

FOR POSTED SPEEDS ≥ 45mph USE GREU TYPE TL-3
FOR POSTED SPEEDS < 45mph USE GREU TYPE TL-2

DETAIL OF BEGINNING OF GUARDRAIL IN CUT OR FILL SECTION

STATE OF
NORTH CAROLINA
DEPT. OF TRANSPORTATION
DIVISION OF HIGHWAYS
RALEIGH, N.C.

ROADWAY DETAIL DRAWING FOR
GUARDRAIL PLACEMENT

SHEET 6 OF 15

862D01

NORTH CAROLINA PROFESSIONAL ENGINEER SEAL 033144 NICOLE M. HACKLER

Signed by:
Nicole M. Hackler
5884323D34164C5...
1/2/2025

DOCUMENT NOT CONSIDERED FINAL
UNLESS ALL SIGNATURES COMPLETED

CONTRACTS STANDARDS AND DEVELOPMENT UNIT
Office 919-707-6950 FAX 919-250-4119

SEE TITLE BLOCK

ORIGINAL BY: S.CALHOUN DATE: 7-25-2024
MODIFIED BY: DATE:
CHECKED BY: DATE:
FILE SPEC.:

PROJECT REFERENCE NO.	SHEET NO.
BP8.R021	2C-5

PLACE APPROVED BICYCLE FRIENDLY RAILINGS, FENCE, OR RUB RAILS IF SIDEPATH/SHARED-USE PATH IS LOCATED LESS THAN 4 FEET FROM THE POST

SEE THE ROADWAY DESIGN MANUAL (PART I CHAPTER 4 SECTION 4.14) FOR OFFSET DISTANCES FROM FACE OF GUARDRAIL AND BACK OF GUARDRAIL TO SIDEWALK OR SIDEPATH/SHARED-USE PATH

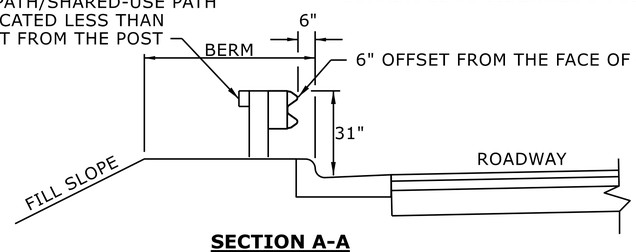

SECTION A-A

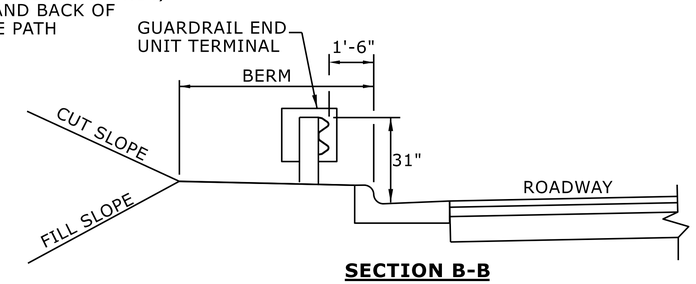

SECTION B-B

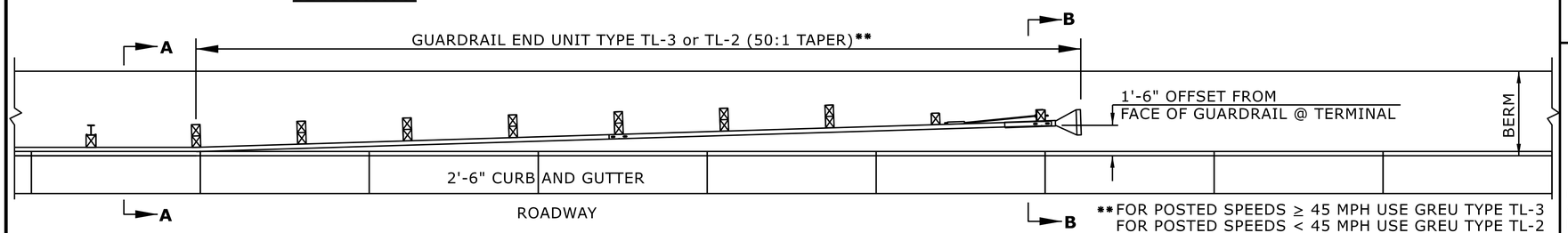

GUARDRAIL 6" FROM THE FACE OF CURB

** FOR POSTED SPEEDS ≥ 45 MPH USE GREU TYPE TL-3
FOR POSTED SPEEDS < 45 MPH USE GREU TYPE TL-2

BICYCLE FRIENDLY RAILINGS, FENCE OR RUB RAIL SHOULD NOT BE PLACED WITHIN THE LIMITS OF THE STRUCTURAL ANCHOR OR END UNITS

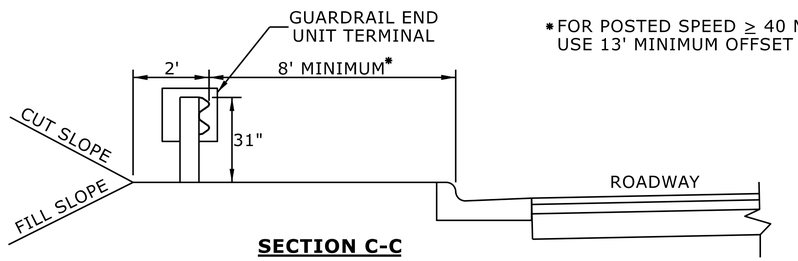

SECTION C-C

* FOR POSTED SPEED ≥ 40 MPH USE 13' MINIMUM OFFSET

SEE THE ROADWAY DESIGN MANUAL (PART I CHAPTER 4 SECTION 4.14) FOR OFFSET DISTANCES FROM FACE OF GUARDRAIL AND BACK OF GUARDRAIL TO SIDEWALK OR SIDEPATH/SHARED-USE PATH

** FOR POSTED SPEEDS ≥ 45 MPH USE GREU TYPE TL-3
FOR POSTED SPEEDS < 45 MPH USE GREU TYPE TL-2

BICYCLE FRIENDLY RAILINGS, FENCE OR RUB RAIL SHOULD NOT BE PLACED WITHIN THE LIMITS OF THE STRUCTURAL ANCHOR OR END UNITS

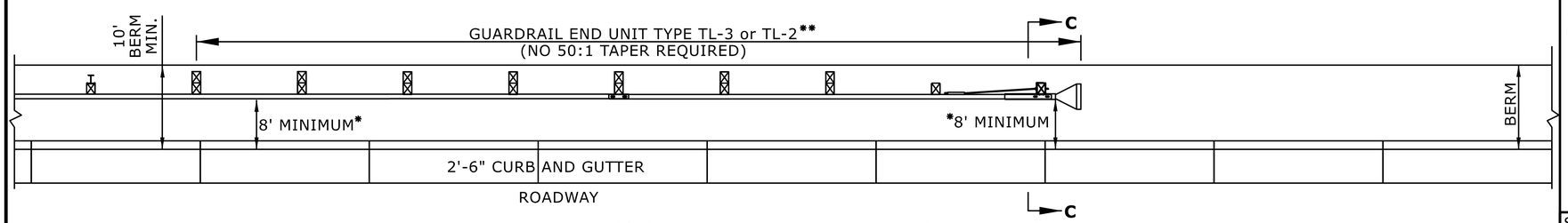

GUARDRAIL 8' OR GREATER OFFSET FROM FACE OF CURB

STATE OF
NORTH CAROLINA
DEPT. OF TRANSPORTATION
DIVISION OF HIGHWAYS
RALEIGH, N.C.

ROADWAY DETAIL DRAWING FOR
GUARDRAIL PLACEMENT
GUARDRAIL TREATMENT AT CURB AND GUTTER

SHEET 12 OF 15

862D01

NORTH CAROLINA PROFESSIONAL SEAL 033144 ENGINEER NICOLE M. HACKLER

Signed by: Nicole M. Hackler
5884323D34164C5...
1/2/2025

DOCUMENT NOT CONSIDERED FINAL UNLESS ALL SIGNATURES COMPLETED

CONTRACTS STANDARDS AND DEVELOPMENT UNIT
Office 919-707-6950 FAX 919-250-4119

SEE TITLE BLOCK

ORIGINAL BY: S.CALHOUN DATE: 7-25-2024
MODIFIED BY: DATE:
CHECKED BY: DATE:
FILE SPEC.:

PROJECT REFERENCE NO.	SHEET NO.
BP8.R021	2C-6

DRAWING NOT TO SCALE

NOTE:

1. SEE DETAIL SHEET 2 OF 2 FOR OTHER DETAILS.
2. STEEL POSTS SHOWN.
3. TYPICAL POST SPACING IS 6'-3" UNLESS OTHERWISE NOTED.

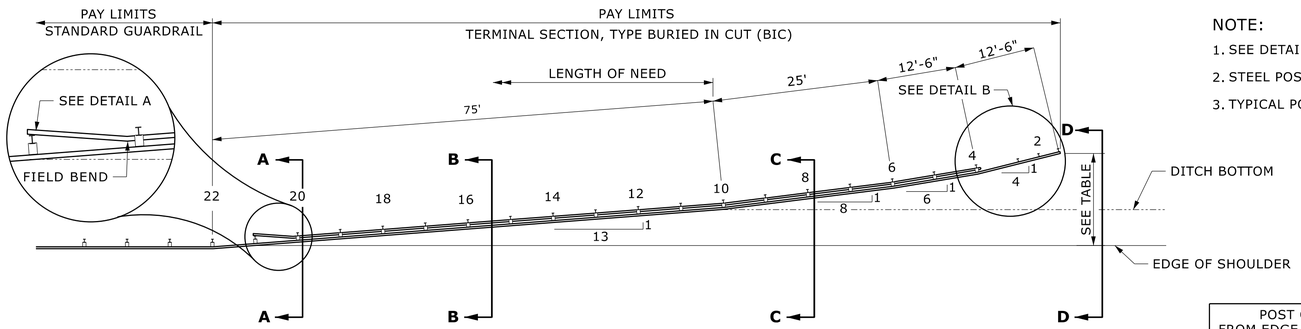

PLAN

POST OFFSETS FROM EDGE OF SHOULDER	
POST	DISTANCE
1	13'-11¾"
4	10'-11"
6	8'-10¼"
10	69"

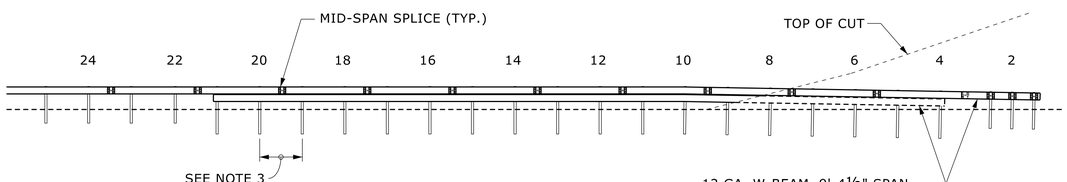

ELEVATION

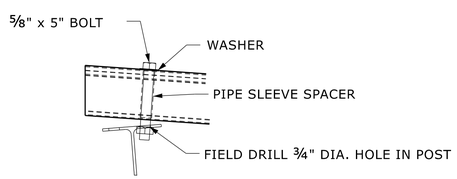

DETAIL A

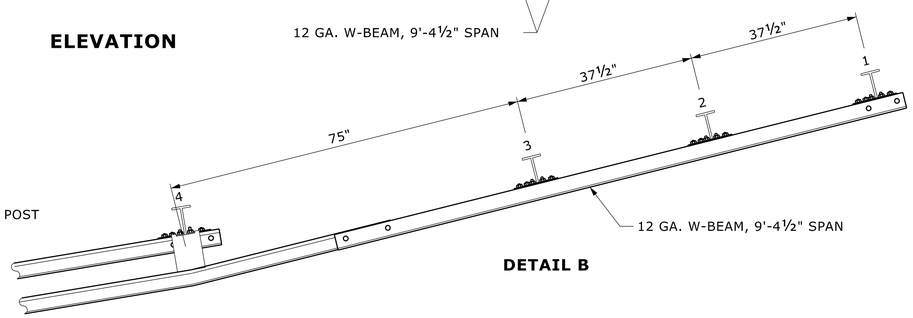

DETAIL B

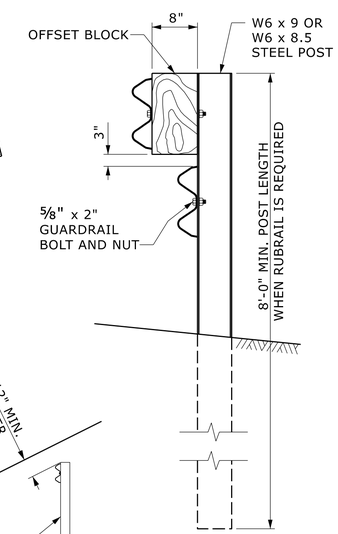

STEEL POST AND BLOCK DETAIL

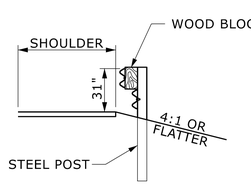

SECTION A-A

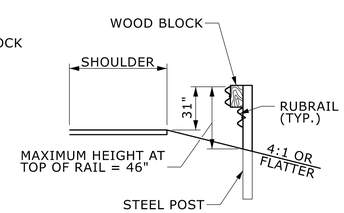

SECTION B-B

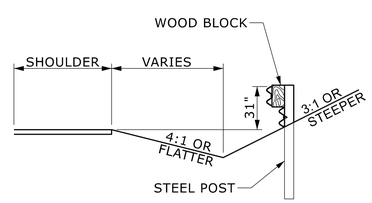

SECTION C-C

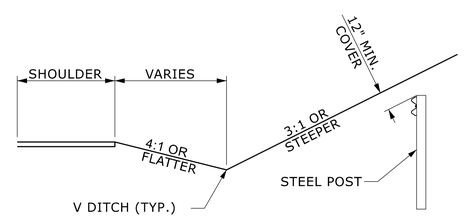

SECTION D-D

STATE OF
NORTH CAROLINA
DEPT. OF TRANSPORTATION
DIVISION OF HIGHWAYS
RALEIGH, N.C.

ROADWAY DETAIL DRAWING FOR
GUARDRAIL PLACEMENT
BURIED IN CUT END UNIT

SHEET 14 OF 15

862D01

NORTH CAROLINA PROFESSIONAL SEAL 033144 ENGINEER NICOLE M. HACKLER

Signed by:
Nicole M. Hackler
68B4323D34164C5...
1/2/2025

DOCUMENT NOT CONSIDERED FINAL
UNLESS ALL SIGNATURES COMPLETED

CONTRACTS STANDARDS AND DEVELOPMENT UNIT
Office 919-707-6950 FAX 919-250-4119

SEE TITLE BLOCK

ORIGINAL BY: S.CALHOUN DATE: 7-25-2024
MODIFIED BY: DATE:
CHECKED BY: DATE:
FILE SPEC.:

PROJECT REFERENCE NO.	SHEET NO.
BP8.R021	2C-7

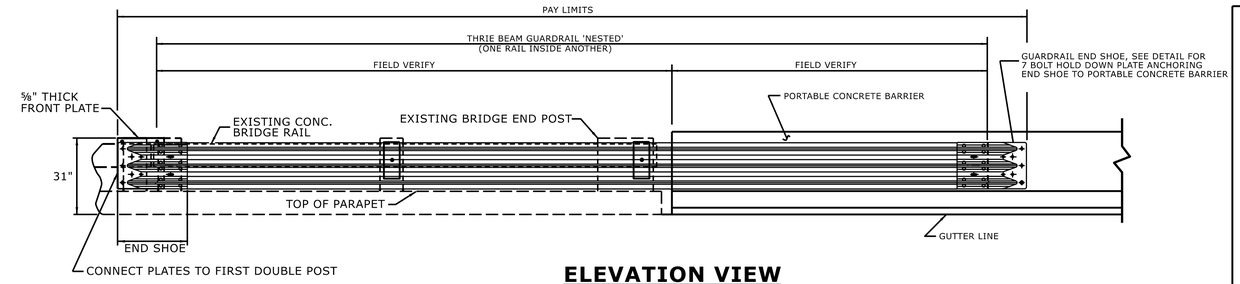

ELEVATION VIEW

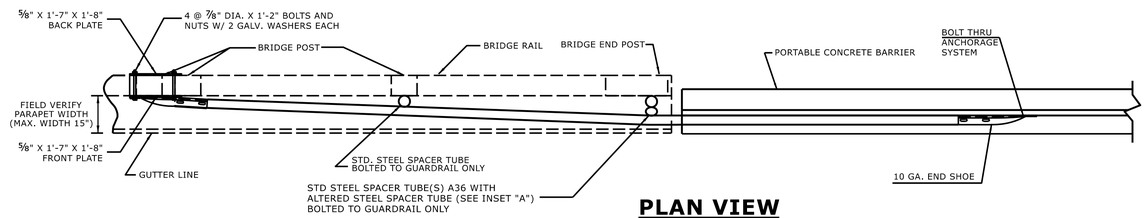

PLAN VIEW

NOTES FOR 7 BOLT HOLD DOWN PLATE

THE GUARDRAIL ANCHOR ASSEMBLY SHALL CONSIST OF A ¼" HOLD DOWN PLATE AND 7 - ⅞" DIA. BOLTS WITH NUTS AND WASHERS.

THE HOLD-DOWN PLATE SHALL CONFORM TO AASHTO M270 GRADE 36. AFTER FABRICATION, THE HOLD-DOWN PLATE SHALL BE HOT-DIP GALVANIZED IN ACCORDANCE WITH AASHTO M111.

AFTER INSTALLATION, THE EXPOSED THREAD OF THE BOLT SHALL BE BURRED WITH A SHARP POINTED TOOL. THE 1¼" DIA. HOLES SHALL BE FORMED OR DRILLED WITH A CORE BIT. IMPACT TOOLS WILL NOT BE PERMITTED. ANY CONCRETE DAMAGED BY THIS WORK SHALL BE REPAIRED TO THE SATISFACTION OF THE ENGINEER.

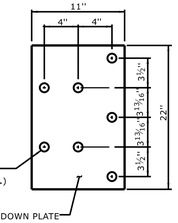

7 BOLT HOLD DOWN PLATE

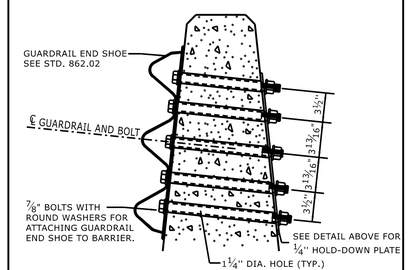

PART SECTION OF BARRIER OR RAIL

THRU END SHOE SECTION AND 7 BOLT HOLD DOWN PLATE

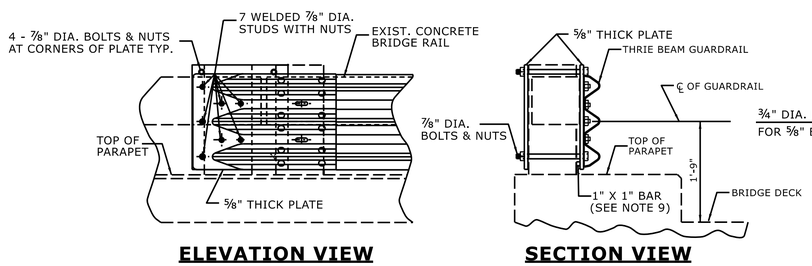

ELEVATION VIEW

SECTION VIEW

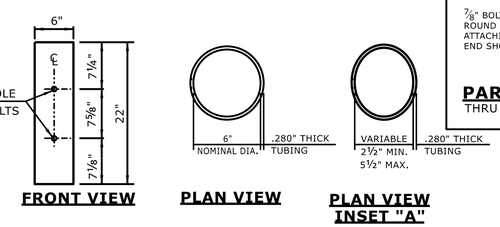

FRONT VIEW

PLAN VIEW

PLAN VIEW INSET "A"

STEEL SPACER TUBE

GENERAL NOTES:

1. USE NUTS, BOLTS, AND WASHERS CONFORMING TO THE REQUIREMENTS OF A.S.T.M. A-307 AND GALVANIZED IN ACCORDANCE WITH SECTION 1076 OF STAND. SPECS.
2. TAP NUTS FOR THE ⅞" DIA. STUDS AND BOLTS AFTER GALVANIZING SEE A.S.T.M. A-563.
3. USE PLATES AND TUBES CONFORMING TO THE REQUIREMENTS OF A.S.T.M. A-36 AND GALVANIZED AFTER FABRICATION IN ACCORDANCE WITH SECTION 1076 OF STAND. SPECS.
4. ADDITIONAL FIELD HOLES MAY BE DRILLED IN STEEL RAIL AS DIRECTED BY THE ENGINEER.
5. INSTALL FACE OF GUARDRAIL AS NEAR AS POSSIBLE TO PLUMB WITH THE PARAPET FACE AT BRIDGE END POST SPACER TUBE LOCATION BY USING STANDARD OR ALTERED SPACER TUBES OR A COMBINATION THEREOF OR AS DIRECTED BY THE ENGINEER. FOR VERY SMALL PARAPET WIDTHS, GUARDRAIL MAY BE INSTALLED AGAINST BRIDGE RAIL WITHOUT SPACER TUBES.
6. DO NOT DRILL BRIDGE RAIL IN ORDER TO INSTALL GUARDRAIL ANCHOR UNIT.
7. USE THIS DETAIL ONLY FOR BRIGES WITH POST AND BEAM TYPE RAIL.
8. ATTACH 1" X 1" BAR AND THREADED STUDS TO PLATE WITH ¼" WELDS ALL AROUND.
9. 1" X 1" BAR MAY NOT BE NEEDED ON BRIDGE RAILS WHERE FACE OF RAIL DOES NOT PROJECT BEYOND FACE OF POST.
10. PROVIDE SHOP DRAWINGS OF THE PLATES TO THE ENGINEER FOR APPROVAL BEFORE FABRICATING THE PLATES.
11. LAP JOINTS IN THE DIRECTION OF TRAFFIC FLOW.
12. SEE ROADWAY STANDARD DRAWING 862.03 SHEET 3 FOR ADDITIONAL INFORMATION ON THE TYPE III ANCHOR UNIT

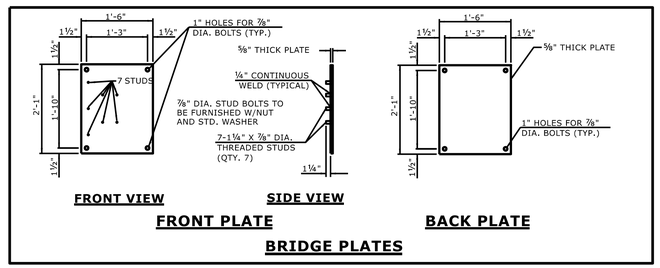

FRONT VIEW

SIDE VIEW

FRONT PLATE

BACK PLATE

BRIDGE PLATES

STATE OF NORTH CAROLINA
DEPT. OF TRANSPORTATION
DIVISION OF HIGHWAYS
RALEIGH, N.C.

ROADWAY DETAIL DRAWING FOR
STRUCTURE ANCHOR UNITS
TEMPORARY ANCHOR UNIT TYPE THRIE-BEAM

SHEET 8 OF 9

862D03

NORTH CAROLINA PROFESSIONAL SEAL 033144 ENGINEER NICOLE M. HACKLER

Signed by: Nicole M. Hackler
5884323D34164C5...
1/2/2025

DOCUMENT NOT CONSIDERED FINAL UNLESS ALL SIGNATURES COMPLETED

CONTRACTS STANDARDS AND DEVELOPMENT UNIT
Office 919-707-6950 FAX 919-250-4119

SEE TITLE BLOCK

ORIGINAL BY: S.CALHOUN DATE: 7-25-2024
MODIFIED BY: DATE:
CHECKED BY: DATE:
FILE SPEC.:

5/14/99

PROJECT REFERENCE NO.	SHEET NO.
BP8.R021	2C-8

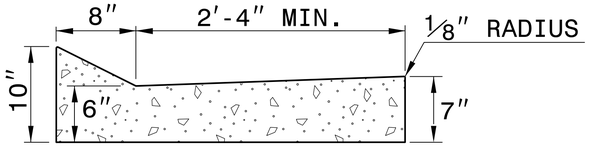

SHOULDER BERM GUTTER

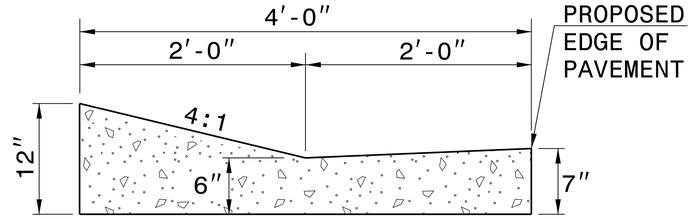

EXPRESSWAY GUTTER

NOTE: SEE STD. DWG. 846.01 FOR ADDITIONAL CURB AND GUTTER INFORMATION.

SEE ROADWAY PLANS FOR LOCATION OF CURB TRANSITION.

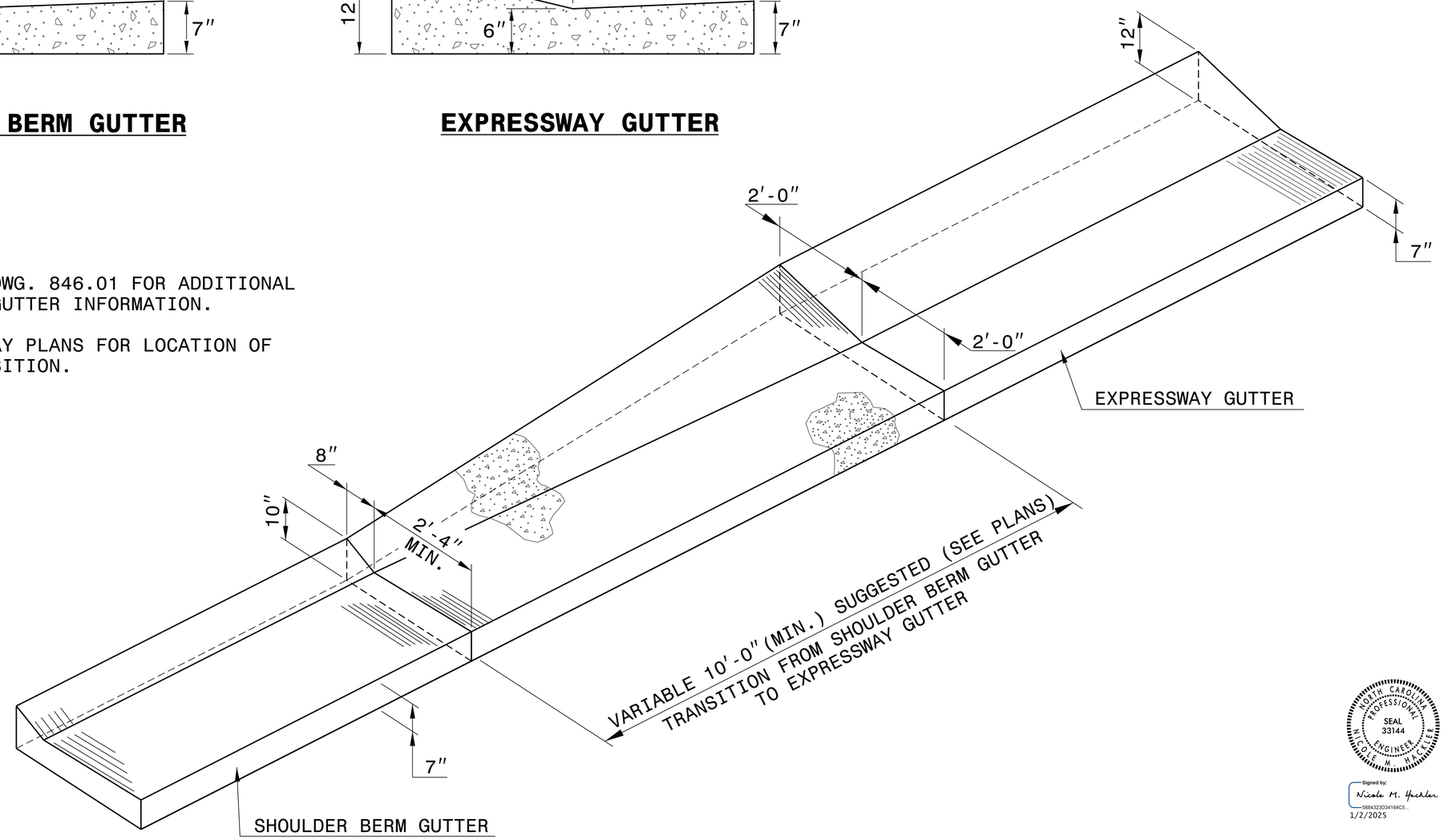

ISOMETRIC VIEW OF TRANSITION

NORTH CAROLINA PROFESSIONAL SEAL 33144 ENGINEER NICOLE M. HECKLER

Signed by: Nicole M. Heckler
5884323D3416 4C5...
1/2/2025

DOCUMENT NOT CONSIDERED FINAL UNLESS ALL SIGNATURES COMPLETED

CONTRACT STANDARDS AND DEVELOPMENT UNIT
Office 919-707-6950 FAX 919-250-4119

DETAIL OF SHOULDER BERM GUTTER TO EXPRESSWAY GUTTER TRANSITION SECTION

ORIGINAL BY: T.S.Spell DATE: 8-13-02
MODIFIED BY: DATE:
CHECKED BY: DATE:
FILE SPEC.: w:usr/details/stand/cgtransit.dgn

04-JUN-2019 10:25
S:\Contracts\Contracts\Special Details\ericward\usr\details\stand\c&g transition sections.dgn
jhowerton AT CSD-292595

SUMMARY OF EARTHWORK

IN CUBIC YARDS

STATION	STATION	UNCL. EXCAV.	EMBANK. +%	BORROW	WASTE
–L– 14+00	15+96.33	58	266	208	
	SUBTOTAL	58	266	208	
–L– 17+03.67	20+55	689	194		495
	SUBTOTAL	689	194		495
TOTAL		747	461	208	495
MATERIAL FOR SHOULDER CONSTRUCTION			167	167	
LOSS DUE TO CLEARING & GRUBBING		–0		0	
WASTE IN LIEU OF BORROW				–375	–375
PROJECT TOTAL		747	628	0	120
EST. 5% TO REPLACE TOP SOIL ON BORROW PIT					
GRAND TOTALS:		747			
SAY:		800			

SUMMARY OF EXISTING ASPHALT PAVEMENT REMOVAL

SURVEY LINE	STATION	STATION	LOCATION LT/RT/CL	YD^2
L	15+50	16+12	CL	138
L	16+84	17+50	CL	117
			TOTAL:	255
			SAY:	260

SHOULDER BERM GUTTER SUMMARY

SURVEY LINE	STATION	STATION	LENGTH
L (LT SIDE)	14+00.0	14+43.2	43.2
L (RT SIDE)	15+49.2	15+81.4	32.2
L (RT SIDE)	17+10.4	17+67.1	56.7
		TOTAL:	132.1
		SAY:	135

EXPRESSWAY GUTTER SUMMARY

SURVEY LINE	STATION	STATION	LENGTH	
L (LT SIDE)	14+43.2	14+60.0	16.8	TRANSISTION SBG TO ESPRESSWAY GUTTER
L (LT SIDE)	14+60.0	15+79.6	119.6	
L (LT SIDE)	15+79.6	15+89.6	10.0	TRANSISTION ESPRESSWAY GUTTER TO SBG
		TOTAL:	146.4	
		SAY:	150	

"N" = DISTANCE FROM EDGE OF LANE TO FACE OF GUARDRAIL.
TOTAL SHOULDER WIDTH = DISTANCE FROM EDGE OF TRAVEL LANE TO SHOULDER BREAK POINT.
FLARE LENGTH = DISTANCE FROM LAST SECTION OF PARALLEL GUARDRAIL TO END OF GUARDRAIL.
W = TOTAL WIDTH OF FLARE FROM BEGINNING OF TAPER TO END OF GUARDRAIL.
G = GATING IMPACT ATTENUATOR TYPE 350
NG = NON–GATING IMPACT ATTENUATOR TYPE 350

GUARDRAIL SUMMARY

SURVEY LINE	BEG. STA.	END STA.	LOCATION	LENGTH			WARRANT POINT		"N" DIST. FROM E.O.L.	TOTAL SHOUL. WIDTH	FLARE LENGTH		W		ANCHORS									IMPACT ATTENUATOR TYPE 350			SINGLE FACED CONCRETE BARRIER	REMOVE EXISTING GUARDRAIL	REMOVE AND STOCKPILE EXISTING GUARDRAIL	REMARKS
				STRAIGHT	SHOP CURVED	DOUBLE FACED	APPROACH END	TRAILING END			APPROACH END	TRAILING END	APPROACH END	TRAILING END	XI MOD	GREU TL–2	GREU TL–3	M–350	TYPE III	CAT–1	VI MOD	BIC	AT–1	EA	G	NG				
L	15+45.00	16+01.63	LT	43.15	20			16+01.63	6	9									1				1							
L	15+33.6	15+93.37	RT	44.11	15		15+93.37		6	9									1				1							
L	17+06.63	18+25.38	LT	118.75			17+06.63		6	9	50		1				1		1											
L	16+98.37	18+17.12	RT	118.75				16+98.37	6	9		50		1			1		1											
		SUBTOTAL		324.76	35												2		4				2							
		LESS ANCHOR DEDUCTIONS																												
		GREU TL–3 2 @ 50'		–100.00																										
		TYPE III 4 @ 18.75'		–75.00																										
		TOTAL		149.76	35												2		4				2							
		SAY		150.0	35		5 ADDITIONAL GUARDRAIL POSTS										2		4				2							

4/04/06

COMPUTED BY:________________ DATE:______________
CHECKED BY: BAW ________________ DATE:______________

STATE OF NORTH CAROLINA
DIVISION OF HIGHWAYS

PROJECT REFERENCE NO.	SHEET NO.
BP8.R021	3D-1

LIST OF PIPES, ENDWALLS, ETC. (FOR PIPES 48" & UNDER)

STATION / SIZE / THICKNESS OR GAUGE	LOCATION (LT,RT, OR CL)	STRUCTURE NO. FROM	STRUCTURE NO. TO	TOP ELEVATION	INVERT ELEVATION	INVERT ELEVATION	SLOPE CRITICAL	DRAINAGE PIPE (RCP, CSP, CAAP, HDPE, or PVC) 12"	15"	18"	24"	30"	36"	42"	48"	DO NOT USE RCP	DO NOT USE CSP	DO NOT USE CAAP	DO NOT USE HDPE
14+33	LT	0406		396.3	393.5														
	LT	0406	0407		393.5	390.8													
15+00	LT	0407		393.6	390.8														
	LT	0407	0408		390.8	389.1													
15+78	LT	0408		391.9	389.1														
15+78	LT	0408	0409		389.1	391.0			28							X	X	X	
15+42	LT	0410							36										
15+78	RT	0401		391.5	388.7														
		0401	0402		388.7	383.2			24							X	X	X	
17+15	RT	0403		390.5	387.7														
		0403	0404		387.7	387.7													
17+28	RT	0404		390.4	387.7														
		0404	0405		387.7	384.4			20							X	X	X	
TOTALS									108										

STATION	STRUCTURE NO. FROM	STRUCTURE NO. TO	C.S. PIPE 12" .064	15" .064	18" .064	24" .064	30" .079	36" .079	42" .109	48" .109	R.C. PIPE CLASS III 12"	15"	18"	24"	30"	36"	42"	48"	R.C. PIPE CLASS IV 12"	15"	18"	24"	30"	36"	42"	48"	**" R.C. PIPE (CLASS V)	***" RC PIPE CULVERTS, CONTRACTOR DESIGN	15" SIDE DRAIN PIPE	18" SIDE DRAIN PIPE
14+33	0406																													
	0406	0407																		64										
15+00	0407																													
	0407	0408																		76										
15+78	0408																													
15+78	0408	0409																												
15+42	0410																													
15+78	0401																													
	0401	0402																												
17+15	0403																													
	0403	0404																		12										
17+28	0404																													
	0404	0405																												
TOTALS																				152										

STATION	STRUCTURE NO. FROM	STRUCTURE NO. TO	ENDWALLS STD. 838.01, STD. 838.11 OR STD. 838.80 (UNLESS NOTED OTHERWISE) CU. YDS. R.C.P.	C.S.P.	QUANTITIES FOR DRAINAGE STRUCTURES PER EACH (0' THRU 5.0')	* TOTAL L.F. FOR PAY QUANTITY SHALL BE COL. 'A' + (1.3 X COL.'B') LIN. *FT. A 5.0' THRU 10.0'	B 10.0' AND ABOVE	C.B. STD. 840.01 OR STD. 840.02	FRAME, GRATES AND HOOD STANDARD 840.03 TYPE OF GRATE E	F	G	CONCRETE TRANSITIONAL SECTION DROP INLET	CATCH BASIN	G.D.I. TYPE "B" STD. 840.18 OR 840.27	T.B.D.I. STD. 840.35	G.D.I. FRAME WITH TWO N.S. SAG GRATES STD. 840.24	G.D.I. FRAME WITH TWO N.S. FLAT GRATES STD. 840.29	CORR. STEEL ELBOWS NO. & SIZE	DRAINAGE PIPE ELBOWS NO. & SIZE	CONC. & BRICK PIPE PLUG, C.Y. STD. 840.71	CONC. COLLARS CL. "B" C.Y. STD 840.72	PIPE REMOVAL LIN.FT.	REMARKS
14+33	0406				1										1		1						
	0406	0407																					
15+00	0407				1										1		1						
	0407	0408																					
15+78	0408				1										1		1		2–15"				
15+78	0408	0409																					
15+42	0410																						
15+78	0401				1										1		1		2–15"				
	0401	0402																					
17+15	0403				1										1		1						
	0403	0404																					
17+28	0404				1										1		1		2–15"				
	0404	0405																					
TOTALS					6										6		6		6–15"				

ABBREVIATIONS

C.B.	CATCH BASIN
N.D.I.	NARROW DROP INLET
D.I.	DROP INLET
G.D.I.	GRATED DROP INLET
G.D.I. (N.S.)	GRATED DROP INLET (NARROW SLOT)
J.B.	JUNCTION BOX
M.H.	MANHOLE
T.B.D.I.	TRAFFIC BEARING DROP INLET
T.B.J.B.	TRAFFIC BEARING JUNCTION BOX

12/30/2024
R:\Roadway\Proj\620026_Rdy_sum.dgn
USERNAME

COMPUTED BY: CMB DATE: 8/31/2023
CHECKED BY: _____ DATE: _____

(2-3-23)

PROJECT NO.	SHEET NO.
BP8.R021.1	3G-1

STATE OF NORTH CAROLINA
DIVISION OF HIGHWAYS

SUMMARY OF SUBSURFACE DRAINAGE

LINE	Station	Station	Location LT/RT/CL	Drain Type* UD/BD/SD	LF
CONTINGENCY				SD	100
				TOTAL LF:	100

*UD = Underdrain
*BD = Blind Drain
*SD = Subsurface Drain

8/17/99

REVISIONS

Pennoni

PENNONI ASSOCIATES INC.
5430 WADE PARK BLVD., SUITE 106,
RALEIGH, NC 27607
(919) 929-1173 NC LICENSE #F-1267

MI ENGINEERING
1011 SCHAUB DRIVE, SUITE 100
RALEIGH, NC 27606
(919) 851-6606
FIRM PE NUMBER : P-0671

PROJECT REFERENCE NO.	SHEET NO.
BP8.R021	4

MOORE COUNTY BRIDGE #26

ROADWAY DESIGN ENGINEER
1/2/2025
NORTH CAROLINA PROFESSIONAL SEAL 16689 ENGINEER BRIAN ALLEN MILES
Signed by: Brian A. Miles
5D0D0F5A2F2F4A...

HYDRAULICS ENGINEER
1/2/2025
NORTH CAROLINA PROFESSIONAL SEAL 18533 ENGINEER ANDREW NOTTINGHAM
DocuSigned by: Andrew Nottingham
C0E6A1DE6D7A47A...

DOCUMENT NOT CONSIDERED FINAL UNLESS ALL SIGNATURES COMPLETED

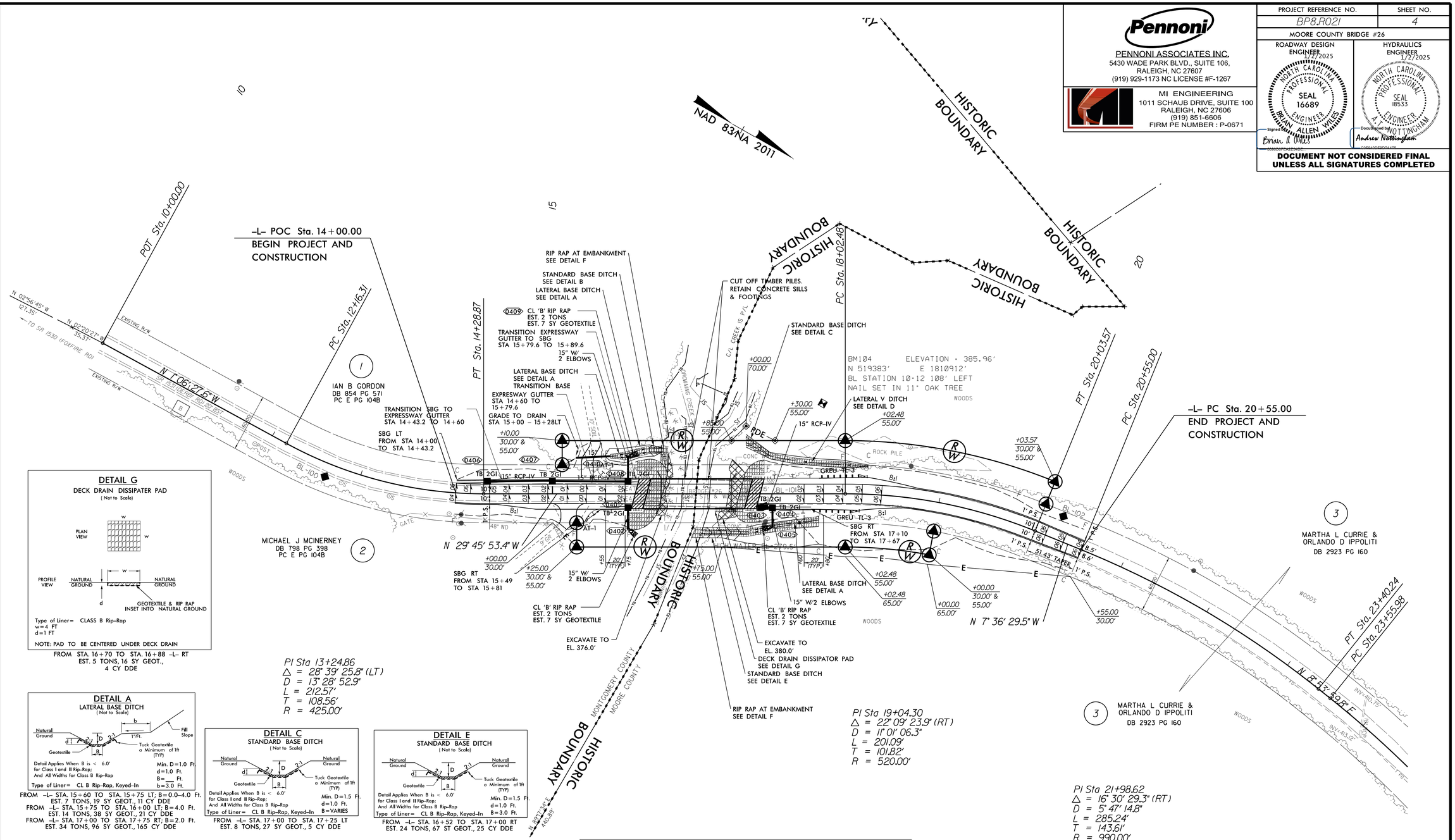

DETAIL G
DECK DRAIN DISSIPATER PAD
(Not to Scale)

Type of Liner= CLASS B Rip-Rap
w=4 FT
d=1 FT

NOTE: PAD TO BE CENTERED UNDER DECK DRAIN

FROM STA. 16+70 TO STA. 16+88 –L– RT
EST. 5 TONS, 16 SY GEOT.,
4 CY DDE

DETAIL A
LATERAL BASE DITCH
(Not to Scale)

Type of Liner= CL B Rip-Rap, Keyed-In

FROM –L– STA. 15+60 TO STA. 15+75 LT; B=0.0–4.0 Ft.
EST. 7 TONS, 19 SY GEOT., 11 CY DDE
FROM –L– STA. 15+75 TO STA. 16+00 LT; B=4.0 Ft.
EST. 14 TONS, 38 SY GEOT., 21 CY DDE
FROM –L– STA. 17+00 TO STA. 17+75 RT; B=2.0 Ft.
EST. 34 TONS, 96 SY GEOT., 165 CY DDE

DETAIL C
STANDARD BASE DITCH
(Not to Scale)

Type of Liner= CL B Rip-Rap, Keyed-In

FROM –L– STA. 17+00 TO STA. 17+25 LT
EST. 8 TONS, 27 SY GEOT., 5 CY DDE

DETAIL E
STANDARD BASE DITCH
(Not to Scale)

Type of Liner= CL B Rip-Rap, Keyed-In

FROM –L– STA. 16+52 TO STA. 17+00 RT
EST. 24 TONS, 67 ST GEOT., 25 CY DDE

DETAIL B
STANDARD BASE DITCH
(Not to Scale)

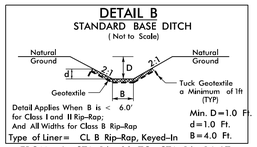

Type of Liner= CL B Rip-Rap, Keyed-In

FROM –L– STA. 16+00 TO STA. 16+14 LT
EST. 8 TONS, 21 SY GEOT., 7 CY DDE

DETAIL D
LATERAL 'V' DITCH
(Not to Scale)

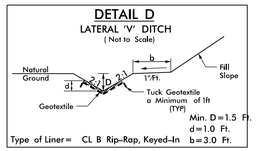

Type of Liner= CL B Rip-Rap, Keyed-In

FROM STA. 17+25 TO STA. 18+25 LT
EST. 25 TONS, 80 SY GEOT., 21 CY DDE

DETAIL F
RIP RAP AT EMBANKMENT
(Not to Scale)

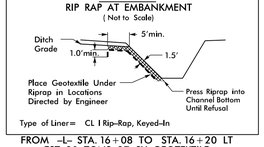

Type of Liner= CL I Rip-Rap, Keyed-In

FROM –L– STA. 16+08 TO STA. 16+20 LT
EST. 20 TONS, 27 SY GEOTEXTILE
FROM –L– STA. 16+47 TO STA. 16+59 RT
EST. 10 TONS, 17 SY GEOTEXTILE

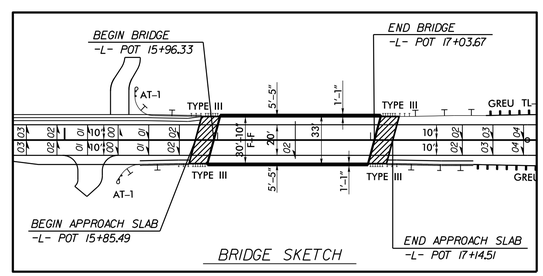

BRIDGE SKETCH

5/14/99

PENNONI ASSOCIATES INC.
5430 WADE PARK BLVD., SUITE 106,
RALEIGH, NC 27607
(919) 929-1173 NC LICENSE #F-1267

MI ENGINEERING
1011 SCHAUB DRIVE, SUITE 100
RALEIGH, NC 27606
(919) 851-6606
FIRM PE NUMBER : P-0671

PROJECT REFERENCE NO.	SHEET NO.
BP8.R021	5

ROADWAY DESIGN ENGINEER
1/2/2025
NORTH CAROLINA PROFESSIONAL SEAL 16689 ENGINEER BRIAN ALLEN WILES
Signature: Brian A. Wiles

HYDRAULICS ENGINEER
1/2/2025
NORTH CAROLINA PROFESSIONAL SEAL 18533 ENGINEER ANDREW NOTTINGHAM
Signature: Andrew Nottingham

DOCUMENT NOT CONSIDERED FINAL UNLESS ALL SIGNATURES COMPLETED

BRIDGE HYDRAULIC DATA

DESIGN DISCHARGE	=	1,100	CFS
DESIGN FREQUENCY	=	25	YRS
DESIGN HW ELEVATION	=	384.0	FT
BASE DISCHARGE	=	1,400	CFS
BASE FREQUENCY	=	100	YRS
BASE HW ELEVATION	=	384.5	FT
OVERTOPPING DISCHARGE	=	11,000	CFS
OVERTOPPING FREQUENCY	=	500+	YRS
OVERTOPPING ELEVATION	=	390.1	FT
DATE OF SURVEY	=	05/04/2022	
W.S.ELEVATION AT DATE OF SURVEY	=	374.6	FT

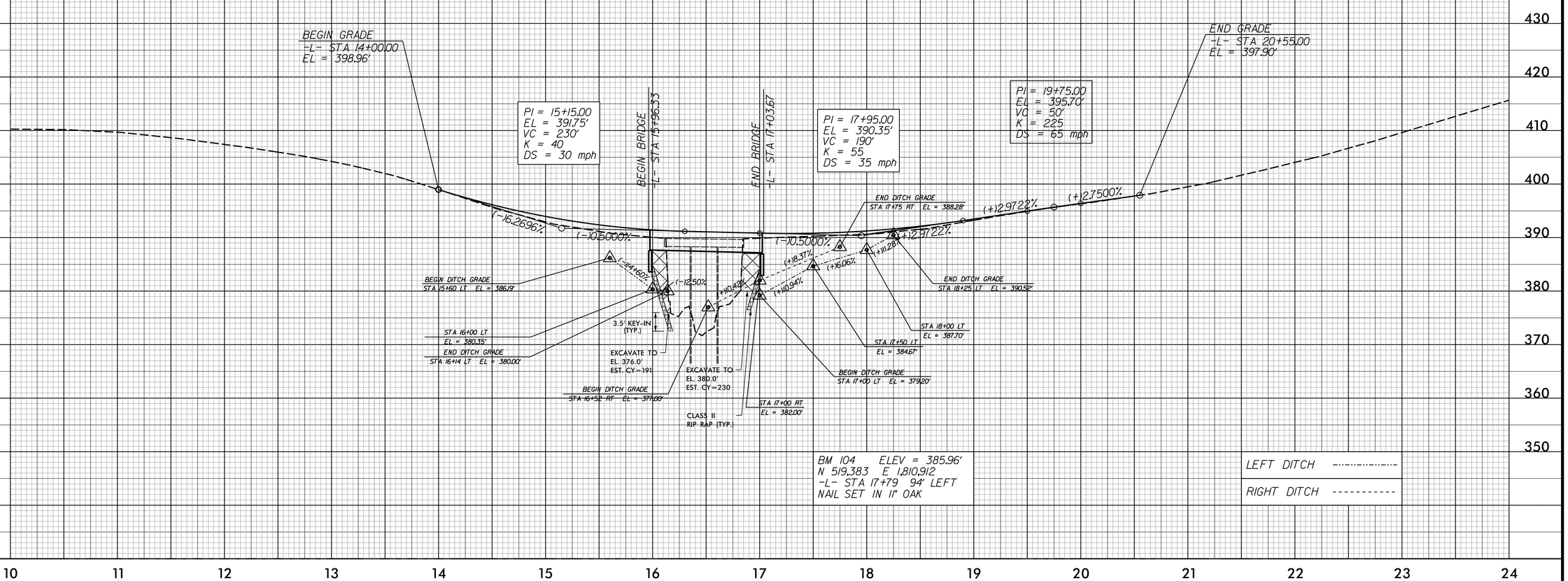

12/30/2024
H:\Roadway\Proj\6200026_Rdy_pf1_05.dgn
USER: 0000

STATE	STATE PROJECT REFERENCE NO.	SHEET NO.	TOTAL SHEETS
N.C.	BP8.R021.1	RW01	5

TIP PROJECT: BP8.R021.1

STATE OF NORTH CAROLINA
DIVISION OF HIGHWAYS

SURVEY CONTROL, EXISTING CENTERLINES,
RIGHT OF WAY, EASEMENTS AND PROPERTY TIES

MOORE & MONTGOMERY COUNTIES

RW04

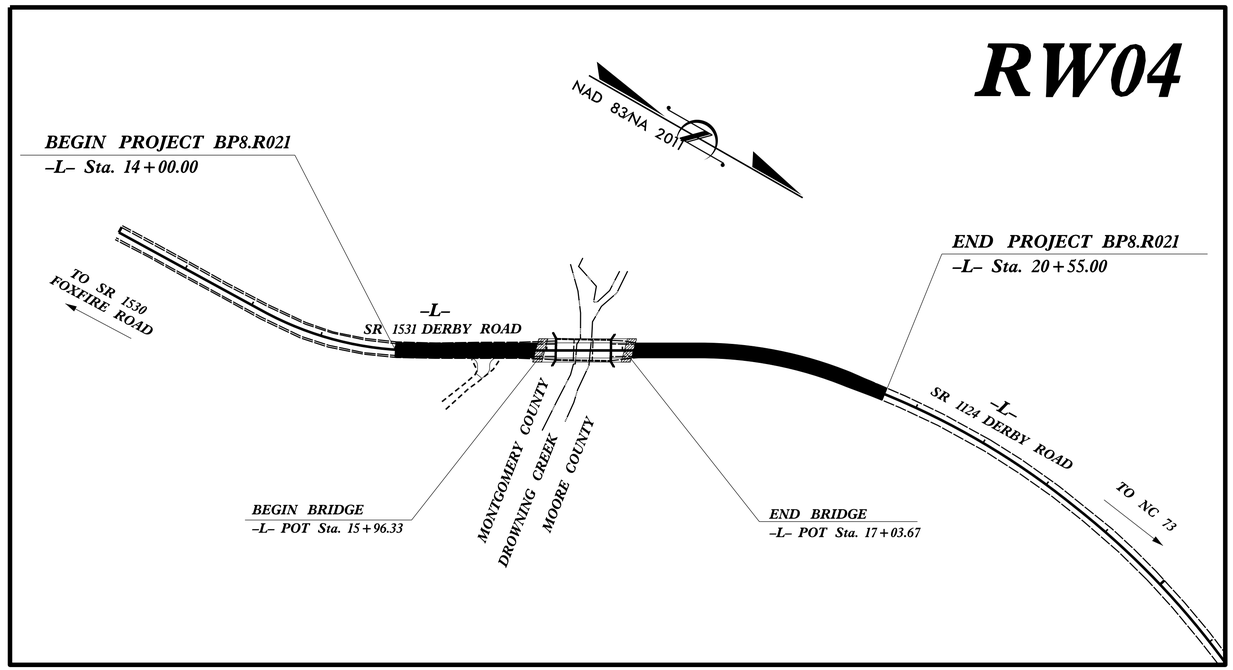

GRAPHIC SCALE

50 25 0 50 100
PLANS

DATUM DESCRIPTION

THE LOCALIZED COORDINATE SYSTEM DEVELOPED FOR THIS PROJECT IS BASED ON THE STATE PLANE COORDINATES ESTABLISHED BY OTHERS FOR MONUMENT "GPS-1"
WITH NAD 83/NA 2011 STATE PLANE GRID COORDINATES OF
NORTHING: 520575.337(ft) EASTING: 1811133.376(ft)
ELEVATION: 438.66(ft)
THE AVERAGE COMBINED GRID FACTOR USED ON THIS PROJECT (GROUND TO GRID) IS: 0.999857306 (1/X = 1.000142714)
THE N.C. LAMBERT GRID BEARING AND
LOCALIZED HORIZONTAL GROUND DISTANCE FROM
"GPS-1" TO -L- 14+00 STATION IS
S 01° 49' 16" E 1475.97'.

ALL LINEAR DIMENSIONS ARE LOCALIZED HORIZONTAL DISTANCES
VERTICAL DATUM USED IS NAVD 88

Prepared in the Office of:

PENNONI ASSOCIATES INC.
5430 Wade Park Boulevard, Suite 106
Raleigh, NC 27607 F-1267
T 919.929.1173 F 919.493.6548

2024 STANDARD SPECIFICATIONS

RIGHT OF WAY DATE:	LETTING DATE:
AUGUST 24, 2023	MARCH 25, 2025

PROFESSIONAL LAND SURVEYOR

Signed by:
J. Auburn Hall, Jr.
72AE42FEEDBD479...
SIGNATURE: Date:

NORTH CAROLINA PROFESSIONAL L-2630 LAND SURVEYOR AUBURN HALL JR.

STATE OF NORTH CAROLINA DEPARTMENT OF TRANSPORTATION

09/08/99

$$$$SYSTIME$$$$
$$$$DGN$$$$
$$$$USERNAME$$$$

SURVEY CONTROL SHEET

W/ EXISTING CENTERLINE ALIGNMENTS PRIOR TO CONSTRUCTION

PROJECT REFERENCE NO.	SHEET NO.
BP8.R021.1	RW02C-1

Location and Surveys

CH ENGINEERING
3220 GLEN ROYAL RD. RALEIGH, NC 27617
TEL. (919) 788-0224 FAX (919) 788-0232
CORPORATE LICENSE # P-0189

PROJECT SURVEYOR

NORTH CAROLINA PROFESSIONAL SEAL L-3994 LAND SURVEYOR JEFFREY S. COATS

DOCUMENT NOT CONSIDERED FINAL UNLESS ALL SIGNATURES COMPLETED

NC GRID NAD 83 NA 2011

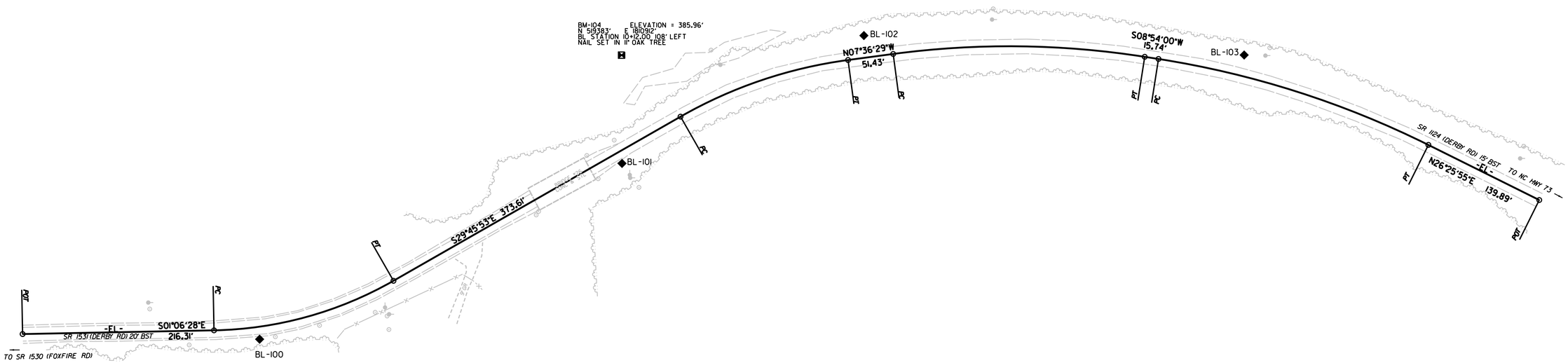

SEE SHEET RW02C-3
FOR FURTHER ALIGNMENT DETAILS

NOTES:

1. PROJECT CONTROL WAS ESTABLISHED USING GNSS, THE GLOBAL NAVIGATION SATELLITE SYSTEM.
2. THE SURVEY CONTROL DATA FOR THIS PROJECT HAS BEEN COMPILED FROM VARIOUS SOURCES. IF FURTHER INFORMATION REGARDING PROJECT CONTROL IS NEEDED, PLEASE CONTACT THE LOCATION AND SURVEYS UNIT.

6/2/99

REVISIONS

SURVEY CONTROL SHEET

W/ EXISTING CENTERLINE ALIGNMENTS PRIOR TO CONSTRUCTION

PROJECT REFERENCE NO.	SHEET NO.
BP8.R021.1	RW02C–2

Location and Surveys

CH ENGINEERING
3220 GLEN ROYAL RD. RALEIGH, NC 27617
TEL. (919) 788-0224 FAX (919) 788-0232
CORPORATE LICENSE # P-0189

PROJECT SURVEYOR

NORTH CAROLINA PROFESSIONAL LAND SURVEYOR
SEAL
L–3994
JEFFREY S. COATS

DOCUMENT NOT CONSIDERED FINAL
UNLESS ALL SIGNATURES COMPLETED

BL

POINT	DESC.	NORTH	EAST	ELEVATION
100	BL-100	518974.3770	1811232.8340	405.42
101	BL-101	519383.8720	1811034.1710	389.34
102	BL-102	519657.1680	1810889.6390	393.98
103	BL-103	520086.8100	1810911.6280	417.70
1	GPS-1	520575.3370	1811133.3760	438.66
2	GPS-2	521342.8285	1811551.1936	482.80

****
BM-104 ELEVATION = 385.96'
N 519383' E 1810912'
BL STATION 10+12.00 108' LEFT
NAIL SET IN 11" OAK TREE
****

NOTES:

1. PROJECT CONTROL WAS ESTABLISHED USING GNSS, THE GLOBAL NAVIGATION SATELLITE SYSTEM.

2. THE SURVEY CONTROL DATA FOR THIS PROJECT HAS BEEN COMPILED FROM VARIOUS SOURCES. IF FURTHER INFORMATION REGARDING PROJECT CONTROL IS NEEDED, PLEASE CONTACT THE LOCATION AND SURVEYS UNIT.

$$$$$SYSTIME$$$$$
$$$$$$$$$$$$$$$$DGN$$$$$$$$$$$$$$$$
$$$$USERNAME$$$$

SURVEY CONTROL SHEET

W/ EXISTING CENTERLINE ALIGNMENTS PRIOR TO CONSTRUCTION

PROJECT REFERENCE NO.	SHEET NO.
BP8.R021.1	RW02C-3

Location and Surveys

CH ENGINEERING
3220 GLEN ROYAL RD. RALEIGH, NC 27617
TEL. (919) 788-0224 FAX (919) 788-0232
CORPORATE LICENSE # P-0189

PROJECT SURVEYOR

NORTH CAROLINA PROFESSIONAL SEAL L-3994 LAND SURVEYOR JEFFREY S. COATS

DOCUMENT NOT CONSIDERED FINAL UNLESS ALL SIGNATURES COMPLETED

POINT	N	E	BEARING	DIST	DELTA	D	L	T	R
POT	518706.611	1811226.984							
LINE			N 01°06'27.6" W	216.31					
PC	518922.876	1811222.802							
CURVE			N 15°26'10.5" W	210.36	28°39'25.8"(LT)	13°28'52.9"	212.57	108.56	425.00
PT	519125.647	1811166.811							
LINE			N 29°45'53.4" W	373.61					
PC	519449.968	1810981.336							
CURVE			N 18°41'11.4" W	199.84	22°09'23.9"(RT)	11°01'06.3"	201.09	101.82	520.00
PT	519639.270	1810917.310							
LINE			N 07°36'29.5" W	51.43					
PC	519690.246	1810910.501							
CURVE			N 00°38'45.2" E	284.25	16°30'29.3"(RT)	05°47'14.8"	285.24	143.61	990.00
PT	519974.482	1810913.705							
LINE			N 08°53'59.8" E	15.74					
PC	519990.033	1810916.140							
CURVE			N 17°39'57.4" E	320.04	17°31'55.1"(RT)	05°27'24.3"	321.29	161.91	1050.00
PT	520294.979	1811013.261							
LINE			N 26°25'55.0" E	139.89					
POT	520420.243	1811075.530							

NOTES:

1. PROJECT CONTROL WAS ESTABLISHED USING GNSS, THE GLOBAL NAVIGATION SATELLITE SYSTEM.

2. THE SURVEY CONTROL DATA FOR THIS PROJECT HAS BEEN COMPILED FROM VARIOUS SOURCES. IF FURTHER INFORMATION REGARDING PROJECT CONTROL IS NEEDED, PLEASE CONTACT THE LOCATION AND SURVEYS UNIT.

PROPOSED ALIGNMENT CONTROL SHEET

PROJECT REFERENCE NO.	SHEET NO.
BP8.R021.1	RW02D-1

Location and Surveys

PENNONI ASSOCIATES INC.
5430 Wade Park Boulevard, Suite 106
Raleigh, NC 27607 F-1267
T 919.929.1173 **F** 919.493.6548

NORTH CAROLINA PROFESSIONAL L-2630 LAND SURVEYOR J. AUBURN HALL, JR.

DOCUMENT NOT CONSIDERED FINAL UNLESS ALL SIGNATURES COMPLETED

I, J. Auburn Hall, Jr., PLS, certify that the data compiled came from available surveys/mapping performed by others and provided to me by NCDOT and do not certify to the accuracy or quality of the individual data sources.

This 30th day of December, 2024.

Signed by:
J. Auburn Hall, Jr.
Professional Land Surveyor L-2630

REVISIONS

L

TYPE	STATION	NORTH	EAST
POT	10+00.00	518706.6108	1811226.9835
PC	12+16.31	518922.8758	1811222.8020
PT	14+28.87	519125.6475	1811166.8113
PC	18+02.48	519449.9678	1810981.3356
PT	20+03.57	519639.2703	1810917.3099
PC	20+55.00	519690.2457	1810910.5009
PT	23+40.24	519974.4822	1810913.7052
PC	23+55.98	519990.0330	1810916.1404
PT	26+77.27	520294.9791	1811013.2614
POT	28+17.16	520420.2433	1811075.5302

NOTES:

1. PROJECT CONTROL WAS ESTABLISHED USING GNSS, THE GLOBAL NAVIGATION SATELLITE SYSTEM.

2. THE PROPOSED ALIGNMENT CONTROL DATA FOR THIS PROJECT HAS BEEN COMPILED FROM VARIOUS SOURCES. IF FURTHER INFORMATION REGARDING PROJECT CONTROL IS NEEDED, PLEASE CONTACT THE LOCATION AND SURVEYS UNIT.

6/2/99

REVISIONS

RIGHT OF WAY CONTROL SHEET

PROJECT REFERENCE NO.	SHEET NO.
BP8.R021.1	RW03E-1

Location and Surveys

PENNONI ASSOCIATES INC.
5430 Wade Park Boulevard, Suite 106
Raleigh, NC 27607 F-1267
T 919.929.1173 **F** 919.493.6548

L-2630

DOCUMENT NOT CONSIDERED FINAL
UNLESS ALL SIGNATURES COMPLETED

I , J. Auburn Hall, Jr., certify that the right of way and permanent easement monumentation for this project shown herein was completed under my direct and responsible charge from an actual survey made under my supervision; that all horizontal closures had a minimum ratio of precision of 1:10,000 (Class A). Field work was performed from 03/01/2022 to 04/26/2022, and all coordinates are based on NAD83/2011; That this survey was performed to meet the requirements of 21NCAC 56.1600 as applicable.

This 30th day of December, 2024.

Signed by:
J. Auburn Hall, Jr.
Professional Land Surveyor L-2630

ROW MARKER CONCRETE OR GRANITE-E

ALIGN	STATION	OFFSET	NORTH	EAST
L	15+10.00	-55.00	519168.7661	1811078.7933
L	15+10.00	-30.00	519181.1772	1811100.4950
L	15+25.00	30.00	519223.9847	1811145.1326
L	15+25.00	55.00	519236.3957	1811166.8344
L	18+02.48	55.00	519477.2721	1811029.0795
L	18+02.48	-55.00	519422.6636	1810933.5917
L	19+00.00	30.00	519548.4255	1810969.4844
L	19+00.00	55.00	519556.5730	1810993.1195
L	20+03.57	-55.00	519631.9884	1810862.7941
L	20+03.57	-30.00	519635.2984	1810887.5740

NOTES:

1. IF FURTHER INFORMATION REGARDING PROJECT CONTROL IS NEEDED PLEASE CONTACT THE LOCATION AND SURVEYS UNIT.
2. PROJECT CONTROL WAS ESTABLISHED USING GNSS, THE GLOBAL NAVIGATION SATELLITE SYSTEM.
3. RIGHT OF WAY MONUMENTATION ESTABLISHED SEPTEMBER 11, 2023.

$$$$SYSTIME$$$$
$$$$USERNAME$$$$
$$$$$$$$$$DGN$$$$$$$$$$$$$$$$$$$$$$$$

6/2/99

REVISIONS

PERMANENT EASEMENT CONTROL SHEET

PROJECT REFERENCE NO.	SHEET NO.
BP.R021.1	RW03E-2

Location and Surveys

PENNONI ASSOCIATES INC.
5430 Wade Park Boulevard, Suite 106
Raleigh, NC 27607 F-1267
T 919.929.1173 **F** 919.493.6548

L-2630

DOCUMENT NOT CONSIDERED FINAL
UNLESS ALL SIGNATURES COMPLETED

I , J. Auburn Hall, Jr., certify that the right of way and permanent easement monumentation for this project shown herein was completed under my direct and responsible charge from an actual survey made under my supervision; that all horizontal closures had a minimum ratio of precision of 1:10,000 (Class A). Field work was performed from 03/01/2022 to 04/26/2022, and all coordinates are based on NAD83/2011; That this survey was performed to meet the requirements of 21NCAC 56.1600 as applicable.

This 30th day of December, 2024.

Signed by:
J. Auburn Hall, Jr.
Professional Land Surveyor L-2630

ROW MARKER PERMANENT EASEMENT-E

ALIGN	STATION	OFFSET	NORTH	EAST
L	16+85.00	-55.00	519320.6784	1810991.9161
L	17+00.00	-70.00	519326.2529	1810971.4484
L	17+30.00	-55.00	519359.7416	1810969.5762

NOTES:

1. IF FURTHER INFORMATION REGARDING PROJECT CONTROL IS NEEDED PLEASE CONTACT THE LOCATION AND SURVEYS UNIT.
2. PROJECT CONTROL WAS ESTABLISHED USING GNSS, THE GLOBAL NAVIGATION SATELLITE SYSTEM.
3. RIGHT OF WAY MONUMENTATION ESTABLISHED SEPTEMBER 11, 2023.

$$$$SYSTIME$$$$
$$$$USERNAME$$$$
$$$$$$$$$$$$DGN$$$$$$$$$$$$$$$$$$$$$$$$

PROJECT REFERENCE NO.	SHEET NO.
BP8.R021.1	RW04

Location and Surveys

PENNONI ASSOCIATES INC.
5430 Wade Park Boulevard, Suite 106
Raleigh, NC 27607 F-1267
T 919.929.1173 F 919.493.6548

NORTH CAROLINA PROFESSIONAL L-2630 LAND SURVEYOR J. AUBURN HALL, JR.

DOCUMENT NOT CONSIDERED FINAL UNLESS ALL SIGNATURES COMPLETED

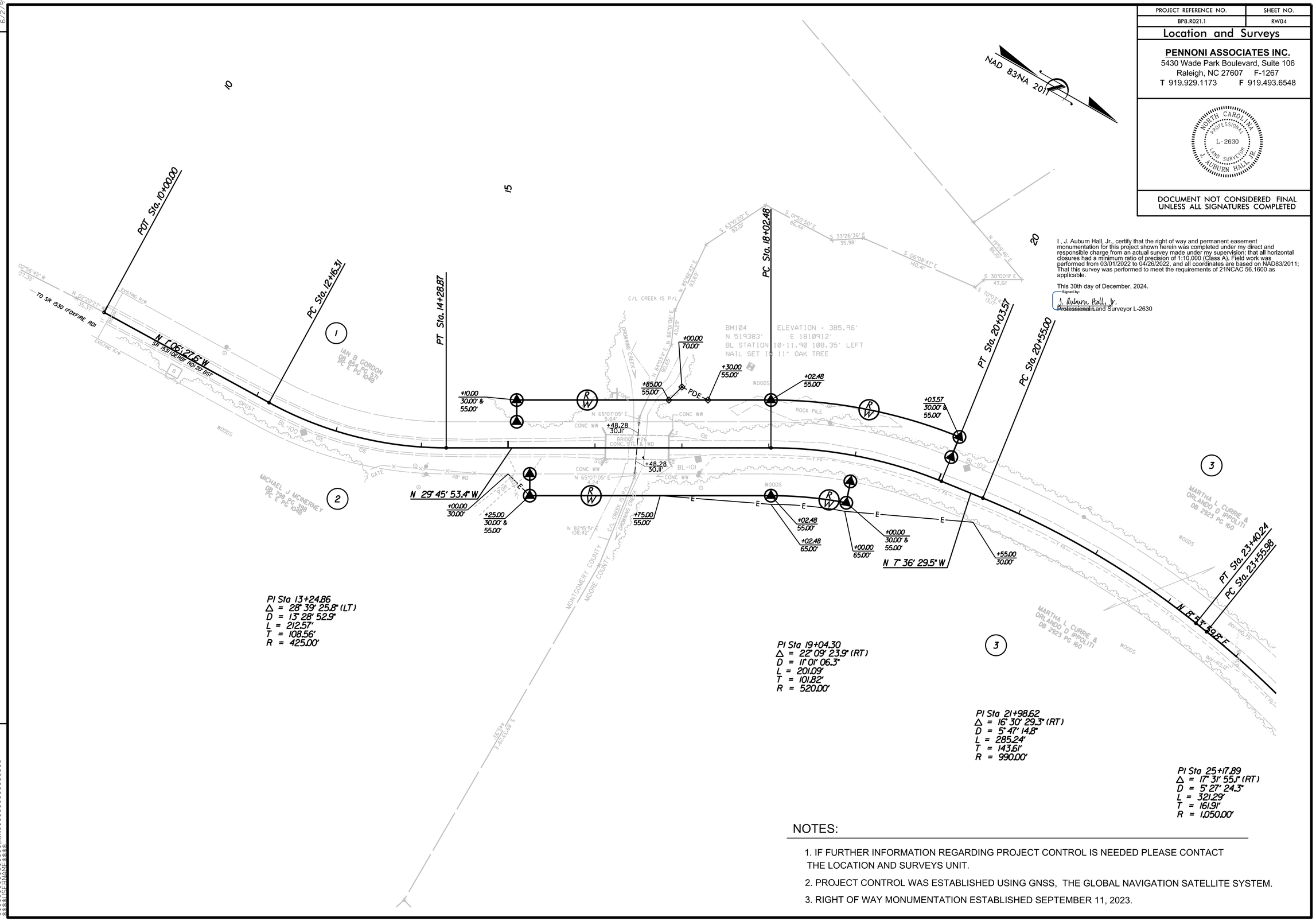

I, J. Auburn Hall, Jr., certify that the right of way and permanent easement monumentation for this project shown herein was completed under my direct and responsible charge from an actual survey made under my supervision; that all horizontal closures had a minimum ratio of precision of 1:10,000 (Class A). Field work was performed from 03/01/2022 to 04/26/2022, and all coordinates are based on NAD83/2011; That this survey was performed to meet the requirements of 21NCAC 56.1600 as applicable.

This 30th day of December, 2024.

Signed by:
J. Auburn Hall, Jr.
Professional Land Surveyor L-2630

NOTES:

1. IF FURTHER INFORMATION REGARDING PROJECT CONTROL IS NEEDED PLEASE CONTACT THE LOCATION AND SURVEYS UNIT.
2. PROJECT CONTROL WAS ESTABLISHED USING GNSS, THE GLOBAL NAVIGATION SATELLITE SYSTEM.
3. RIGHT OF WAY MONUMENTATION ESTABLISHED SEPTEMBER 11, 2023.

REVISIONS

6/2/99

STATE OF NORTH CAROLINA
DIVISION OF HIGHWAYS

TRANSPORTATION MANAGEMENT PLAN

MOORE & MONTGOMERY COUNTIES

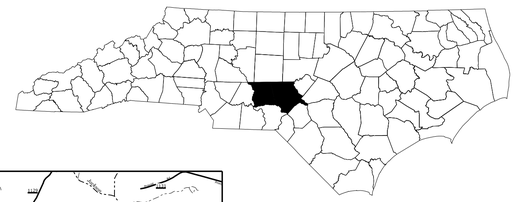

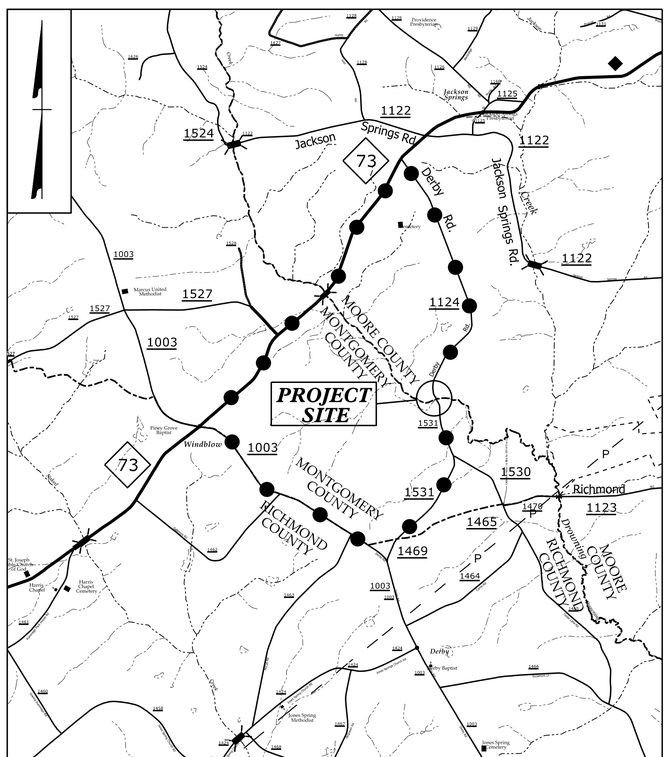

VICINITY MAP

DETOUR ROUTE

LOCATION: BRIDGE NO. 26 OVER DROWNING CREEK ON SR 1124/SR 1521 (DERBY ROAD)

TYPE OF WORK: GRADING, DRAINAGE, PAVING, & STRUCTURE

INDEX OF SHEETS

SHEET NO.
TMP-1

BP8.R021

PROJECT:

DOCUMENT NOT CONSIDERED FINAL UNLESS ALL SIGNATURES COMPLETED

WORK ZONE SAFETY & MOBILITY
"from the MOUNTAINS to the COAST"

PLANS PREPARED BY:

BRIAN A. WILES, PE
PROJECT MANAGER

NCDOT CONTACTS:

TIM WELCH, PE
DIV. 8 BRIDGE PROGRAM MANAGER

DIVISION OF HIGHWAYS STATE OF NORTH CAROLINA DEPARTMENT OF TRANSPORTATION WORK ZONE TRAFFIC CONTROL

PLANS PREPARED FOR:

DIVISION OF HIGHWAYS
DIVISION 8
121 DOT Drive
Carthage, NC 28327

PLANS PREPARED BY:

Pennoni

PENNONI ASSOCIATES INC.
5430 WADE PARK BLVD., SUITE 106,
RALEIGH, NC 27607
(919) 929-1173 NC LICENSE #F-1267

APPROVED: Signed by: Brian A Wiles B89DDFEA2E34DE...

DATE: 1/2/2025

SEAL

NORTH CAROLINA PROFESSIONAL SEAL 16689 ENGINEER BRIAN ALLEN WILES

12/30/2024
R:\Traffic\TrafficControl\TCP\Moore26_TC_TMP_1.dgn
USERNAME=

PROJ. REFERENCE NO.	SHEET NO.
BP8.R021	TMP-1A

ROADWAY STANDARD DRAWINGS

THE FOLLOWING ROADWAY STANDARDS AS SHOWN IN "ROADWAY STANDARD DRAWINGS" - N.C. DEPARTMENT OF TRANSPORTATION - RALEIGH, N.C., DATED JANUARY 2024 ARE APPLICABLE TO THIS PROJECT AND BY REFERENCE HEREBY ARE CONSIDERED A PART OF THESE PLANS:

STD. NO.	TITLE
1101.03	TEMPORARY ROAD CLOSURES
1101.11	TRAFFIC CONTROL DESIGN TABLES
1110.01	STATIONARY WORK ZONE SIGNS
1145.01	BARRICADES
1205.01	PAVEMENT MARKINGS - LINE TYPES AND OFFSETS
1205.02	PAVEMENT MARKINGS - TWO-LANE AND MULTI-LANE ROADWAYS
1205.12	PAVEMENT MARKINGS - BRIDGES
1250.01	RAISED PAVEMENT MARKER - INSTALLATION SPACING
1251.01	RAISED PAVEMENT MARKER - PERMANENT AND TEMPORARY
1261.01	GUARDRAIL AND BARRIER DELINEATORS - INSTALLATION SPACING
1261.02	GUARDRAIL AND BARRIER DELINEATORS - TYPES AND MOUNTING
1262.01	GUARDRAIL END DELINEATION

LEGEND

GENERAL

EXIST. PVMT.

NORTH ARROW

PROPOSED PVMT.

TRAFFIC CONTROL DEVICES

BARRICADE (TYPE III)

TEMPORARY SIGNING

STATIONARY SIGN

FINAL PAVEMENT MARKING

PAINT PAVEMENT MARKING LINES (4")	5,250 LF
PERMANENT RAISED PAVEMENT MARKERS	20 EACH

Pennoni

PENNONI ASSOCIATES INC.
5430 WADE PARK BLVD., SUITE 106,
RALEIGH, NC 27607
(919) 929-1173 NC LICENSE #F-1267

APPROVED: Signed by: Brian A Wiles 8890D0FEA2E34DE...

DATE: 1/2/2025

SEAL

NORTH CAROLINA PROFESSIONAL SEAL 16689 ENGINEER BRIAN ALLEN WILES

DOCUMENT NOT CONSIDERED FINAL UNLESS ALL SIGNATURES COMPLETED

DIVISION OF HIGHWAYS · STATE OF NORTH CAROLINA · DEPARTMENT OF TRANSPORTATION · WORK ZONE TRAFFIC CONTROL

ROADWAY STANDARD DRAWINGS & LEGEND

12/30/2024
R:\Traffic\TrafficControl\TCP\Moore26_TC_TMP_1A.dgn
USERNAME:

PROJ. REFERENCE NO.	SHEET NO.
BP8.R021	TMP-1B

MANAGEMENT STRATEGIES

-CLOSE SR 1124/ SR 1531 (DERBY ROAD) AND DETOUR TRAFFIC OFF-SITE

-MAINTAIN LOCAL ACCESS TO ALL RESIDENCES AND BUSINESSES BETWEEN CLOSURE POINTS AT ALL TIMES DURING CONSTRUCTION

LOCAL NOTES

1) NOTIFY THE ENGINEER AT LEAST 30 DAYS PRIOR TO ANY TRAFFIC PATTERN ALTERATION.

2) NOTIFY THE MOORE COUNTY SCHOOLS TRANSPORTATION OFFICE AT (910) 947-5481 AND MONTGOMERY COUNTY SCHOOLS TRANSPORATION OFFICE AT (910) 576-6511 OF THE BRIDGE REMOVAL 30 DAYS PRIOR TO ROAD CLOSURE.

3) NOTIFY THE MOORE COUNTY EMERGENCY MANAGEMENT AT (910) 947-6317 AND MONTGOMERY COUNTY EMERGENCY MANAGEMENT AT (910) 572-1347 OF THE BRIDGE REMOVAL 30 DAYS PRIOR TO ROAD CLOSURE.

GENERAL NOTES

CHANGES MAY BE REQUIRED WHEN PHYSICAL DIMENSIONS IN THE DETAIL DRAWINGS, STANDARD DETAILS, AND ROADWAY DETAILS ARE NOT ATTAINABLE TO MEET FIELD CONDITIONS OR RESULT IN DUPLICATE OR UNDESIRED OVERLAPPING OF DEVICES. MODIFICATION MAY INCLUDE: MOVING, SUPPLEMENTING, COVERING, OR REMOVAL OF DEVICES AS DIRECTED BY THE ENGINEER.

THE FOLLOWING GENERAL NOTES APPLY AT ALL TIMES FOR THE DURATION OF THE CONSTRUCTION PROJECT EXCEPT WHEN OTHERWISE NOTED IN THE PLAN OR DIRECTED BY THE ENGINEER.

SIGNING

A) PROVIDE SIGNING AND DEVICES REQUIRED TO CLOSE THE ROAD ACCORDING TO THE ROADWAY STANDARD DRAWINGS AND TRANSPORTATION MANAGEMENT PLANS.

PROVIDE SIGNING REQUIRED FOR THE OFF-SITE DETOUR ROUTE AS SHOWN IN THE TRANSPORTATION MANAGEMENT PLANS.

B) COVER OR REMOVE ALL SIGNS AND DEVICES REQUIRED TO CLOSE THE ROAD WHEN ROAD CLOSURE IS NOT IN OPERATION.

COVER OR REMOVE ALL SIGNS REQUIRED FOR THE OFF-SITE DETOUR WHEN THE DETOUR IS NOT IN OPERATION.

C) ENSURE ALL NECESSARY SIGNING IS IN PLACE PRIOR TO ALTERING ANY TRAFFIC PATTERN.

PHASING

STEP 1) USING RSD 1101.03, SHEET 1 OF 9 AND TMP-4, CLOSE SR 1124 / SR 1531 (DERBY ROAD) AND DETOUR TRAFFIC OFF-SITE AS SHOWN ON TMP-3. MAINTAIN ACCESS TO ALL RESIDENCES AND BUSINESSES BETWEEN CLOSURE POINTS.

STEP 2) REMOVE THE EXISTING STRUCTURE.

STEP 3) CONSTRUCT THE PROPOSED STRUCTURE AND ROADWAY.

STEP 4) PLACE FINAL PAVEMENT MARKINGS.

STEP 5) OPEN SR 1124 / SR 1531 (DERBY ROAD) TO TRAFFIC AND REMOVE ALL WORK ZONE TRAFFIC CONTROL DEVICES.

Pennoni
PENNONI ASSOCIATES INC.
5430 WADE PARK BLVD., SUITE 106,
RALEIGH, NC 27607
(919) 929-1173 NC LICENSE #F-1267

APPROVED: Signed by: Brian A Wiles 8890DD0FEA2E34DE...
DATE: 1/2/2025
SEAL

NORTH CAROLINA PROFESSIONAL SEAL 16689 ENGINEER BRIAN ALLEN WILES

DOCUMENT NOT CONSIDERED FINAL UNLESS ALL SIGNATURES COMPLETED

DIVISION OF HIGHWAYS STATE OF NORTH CAROLINA DEPARTMENT OF TRANSPORTATION WORK ZONE TRAFFIC CONTROL

TRANSPORTATION OPERATIONS PLAN

12/30/2024
R:\Traffic\TrafficControl\TCP\Moore26_TC_TMP_1B.dgn
USERNAME:

PROJ. REFERENCE NO.	SHEET NO.
BP8.R021	TMP-2

SIGN NUMBER: SP-1
TYPE: STATIONARY
QUANTITY: SEE PLANS

SIGN WIDTH: 3′-0″
HEIGHT: 1′-6″
TOTAL AREA: 4.5 Sq.Ft.

BORDER TYPE: INSET
RECESS: 0.47″
WIDTH: 0.63″
RADII: 1.5″

NO. Z BARS:
LENGTH:

BACKG COLOR: Fluorescent Orange
COPY COLOR: Black

SYMBOL	X	Y	WID	HT

MAT′L: 0.080″ (2.0 mm) ALUMINUM

DESIGN BY: TAG
PROJECT ID: ID
CHECKED BY:
LOCATION:
May 30, 2023
DIV: DIV

USE NOTES: 1,2

1. Legend and border shall be direct applied black non-reflective sheeting.
2. Background shall be NC GRADE B fluorescent orange retroreflective sheeting.

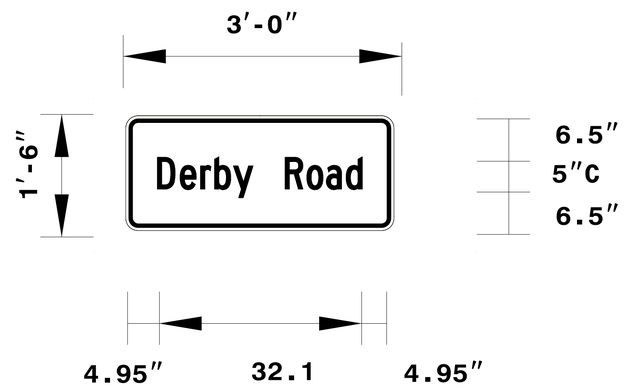

BORDER
R=1.5″
TH=0.63″
IN=0.47″

Spacing Factor is 1 unless specified otherwise

LETTER POSITIONS

Letter locations are panel edge to lower left corner

	D	e	r	b	y		R	o	a	d	Series/Size Text Length
	4.9	8.5	11.7	13.9	16.8	19.9	25	28.3	31.4	34.5	C 2000 32.1

FILENAME: SIGN DESIGNS - Work Zone_5

NORTH CAROLINA D.O.T. SIGN DETAIL

Pennoni

PENNONI ASSOCIATES INC.
5430 WADE PARK BLVD., SUITE 106,
RALEIGH, NC 27607
(919) 929-1173 NC LICENSE #F-1267

APPROVED: Signed by: Brian A Wiles 8890D0FEA2E34DE...
DATE: 1/2/2025
SEAL

NORTH CAROLINA PROFESSIONAL SEAL 16689 ENGINEER BRIAN ALLEN WILES

DOCUMENT NOT CONSIDERED FINAL UNLESS ALL SIGNATURES COMPLETED

DIVISION OF HIGHWAYS · STATE OF NORTH CAROLINA · DEPARTMENT OF TRANSPORTATION · WORK ZONE TRAFFIC CONTROL

SPECIAL SIGN DESIGN

12/30/2024
R:\Traffic\Traffic\TrafficControl\TCP\Moore26_TC_TMP_2.dgn
USERNAME:

PROJ. REFERENCE NO.	SHEET NO.
BP8.R021	TMP-3

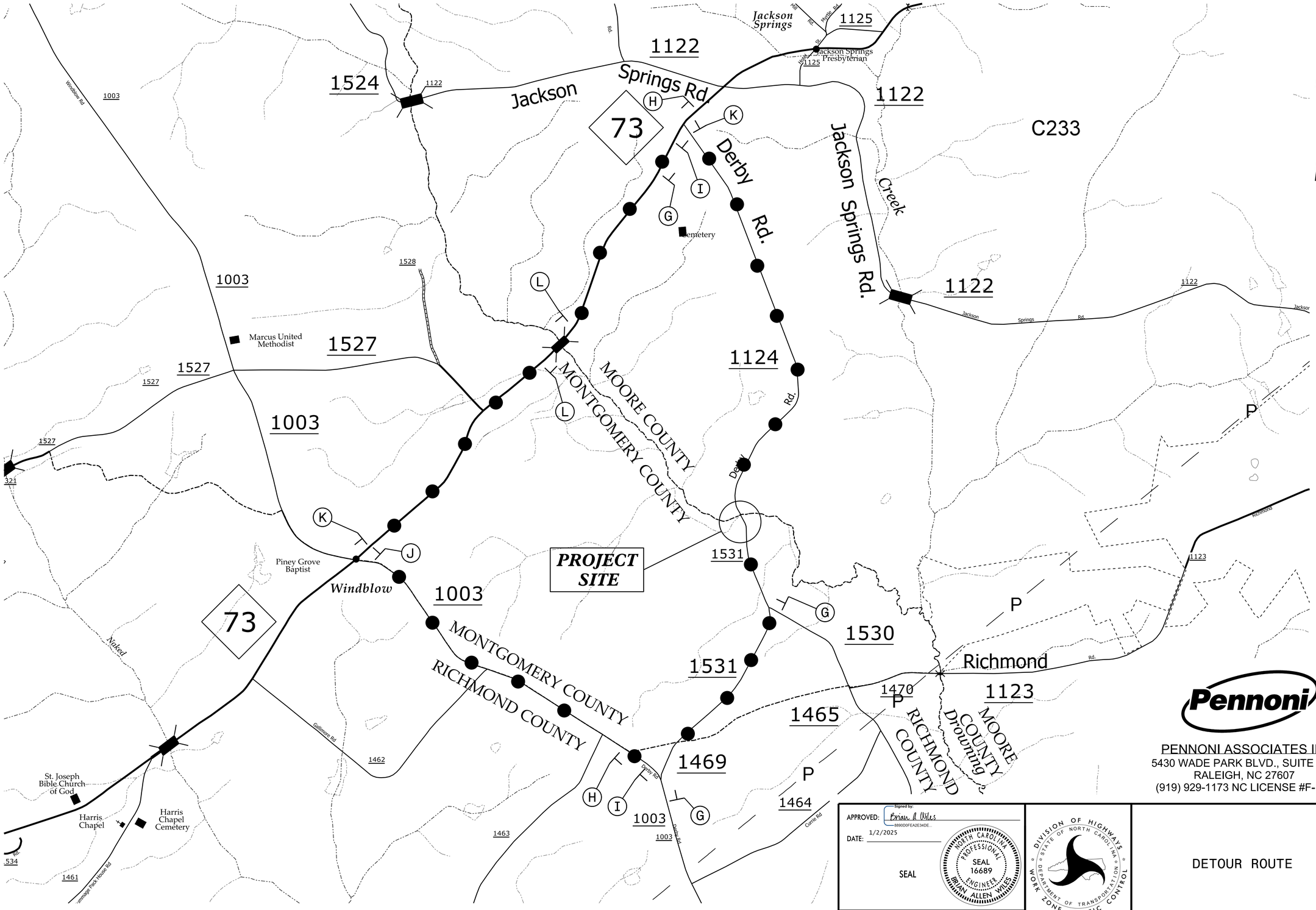

Pennoni

PENNONI ASSOCIATES INC.
5430 WADE PARK BLVD., SUITE 106,
RALEIGH, NC 27607
(919) 929-1173 NC LICENSE #F-1267

APPROVED: Signed by: Brian A Wiles 8890D0FEA2E34DE...

DATE: 1/2/2025

SEAL

NORTH CAROLINA PROFESSIONAL ENGINEER SEAL 16689 BRIAN ALLEN WILES

DOCUMENT NOT CONSIDERED FINAL UNLESS ALL SIGNATURES COMPLETED

DIVISION OF HIGHWAYS · STATE OF NORTH CAROLINA · DEPARTMENT OF TRANSPORTATION · WORK ZONE TRAFFIC CONTROL

DETOUR ROUTE

12/30/2024
R:\Traffic\TrafficControl\TCP\Moore26_TC_TMP_3.dgn
USERNAME

PROJ. REFERENCE NO.	SHEET NO.
BP8.R021	TMP-4

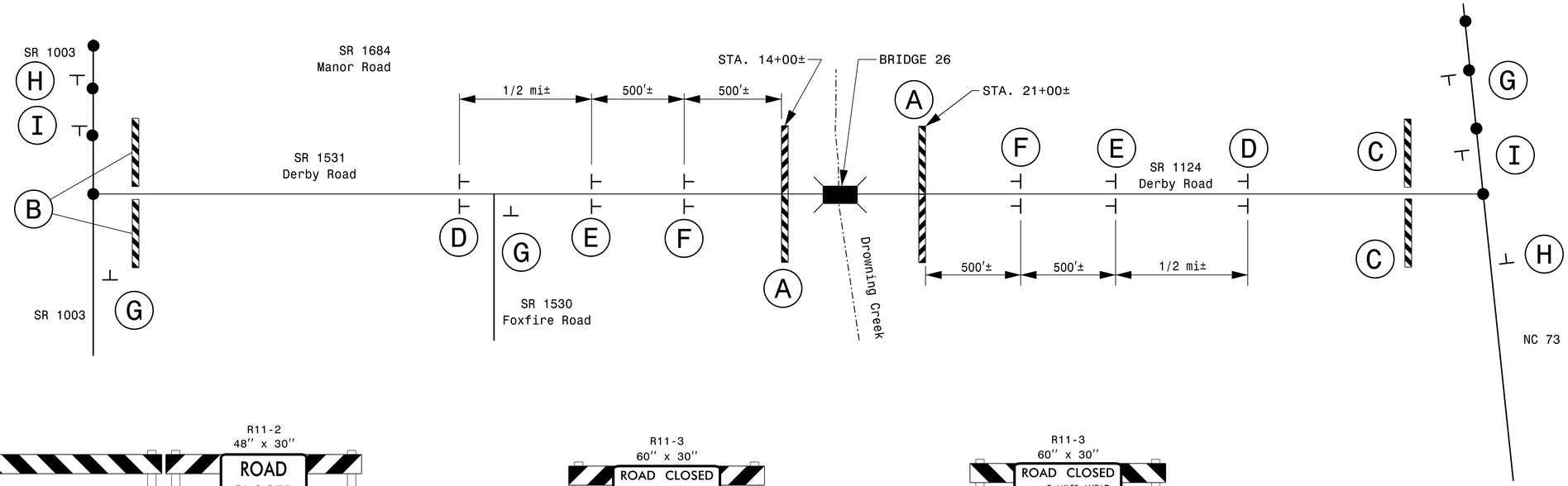

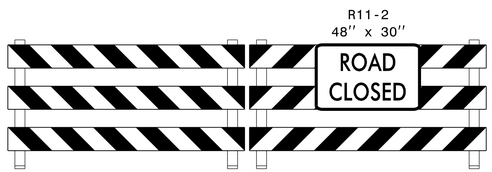

TYPE III BARRICADE(S)

A

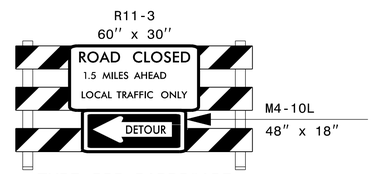

TYPE III BARRICADE

B

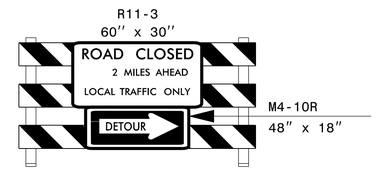

TYPE III BARRICADE

C

D

E

F

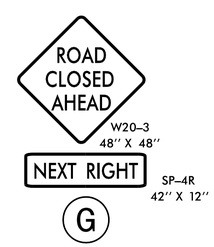

G

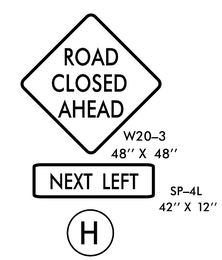

H

I

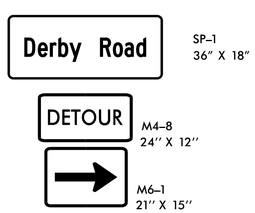

J

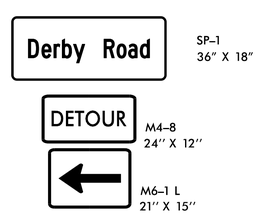

K

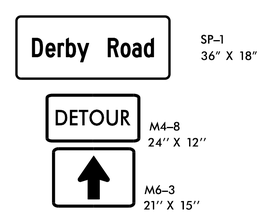

L

Pennoni

PENNONI ASSOCIATES INC.
5430 WADE PARK BLVD., SUITE 106,
RALEIGH, NC 27607
(919) 929-1173 NC LICENSE #F-1267

APPROVED Signed by: Brian A Wiles 3B96D0FEA2E34DE...

DATE: 1/2/2025

SEAL

NORTH CAROLINA PROFESSIONAL SEAL 16689 ENGINEER BRIAN ALLEN WILES

DOCUMENT NOT CONSIDERED FINAL UNLESS ALL SIGNATURES COMPLETED

DIVISION OF HIGHWAYS STATE OF NORTH CAROLINA DEPARTMENT OF TRANSPORTATION WORK ZONE TRAFFIC CONTROL

ROAD CLOSURE DETAIL
and
DETOUR SIGNS

12/30/2024
R:\Traffic\TrafficControl\TCP\Moore26_TC_TMP_4.dgn
USERNAME:

TIP PROJECT: BP8.R021

STATE	STATE PROJECT REFERENCE NO.	SHEET NO.	TOTAL SHEETS
N.C.	BP8.R021	EC-1	

STATE PROJ. NO.	F.A. PROJ. NO.	DESCRIPTION

STATE OF NORTH CAROLINA
DIVISION OF HIGHWAYS

PLAN FOR PROPOSED
HIGHWAY EROSION CONTROL

MOORE & MONTGOMERY COUNTIES

LOCATION: BRIDGE 620026 OVER DROWNING CREEK ON SR 1124/SR 1531 (DERBY ROAD)

TYPE OF WORK: GRADING, DRAINAGE, PAVING & STRUCTURES

THIS PROJECT CONTAINS EROSION CONTROL PLANS FOR CLEARING AND GRUBBING PHASE OF CONSTRUCTION.

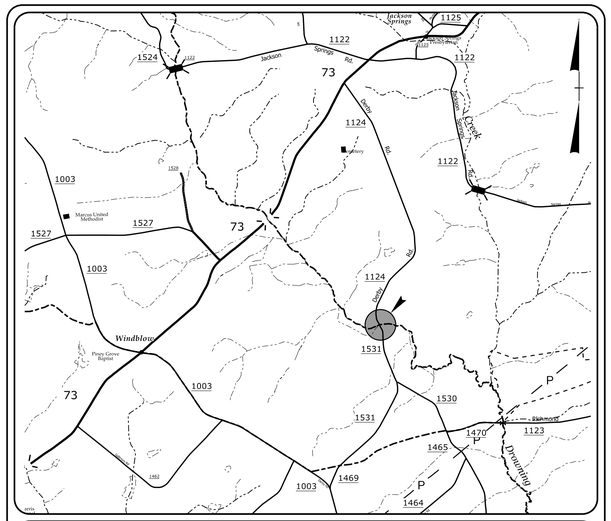

VICINITY MAP

NOT TO SCALE

OFF-SITE DETOUR ROUTE

THIS PROJECT HAS BEEN DESIGNED TO SENSITIVE WATERSHED STANDARDS.

HIGH QUALITY WATER(S) EXIST ON THIS PROJECT

High Quality Water Zone(s) Exist
From Sta. –L– 14+00
to Sta. –L– 20+55
Refer To E. C. Special Provisions for Special Considerations.

ENVIRONMENTALLY SENSITIVE AREA(S) EXIST ON THIS PROJECT

Refer To E. C. Special Provisions for Special Considerations.

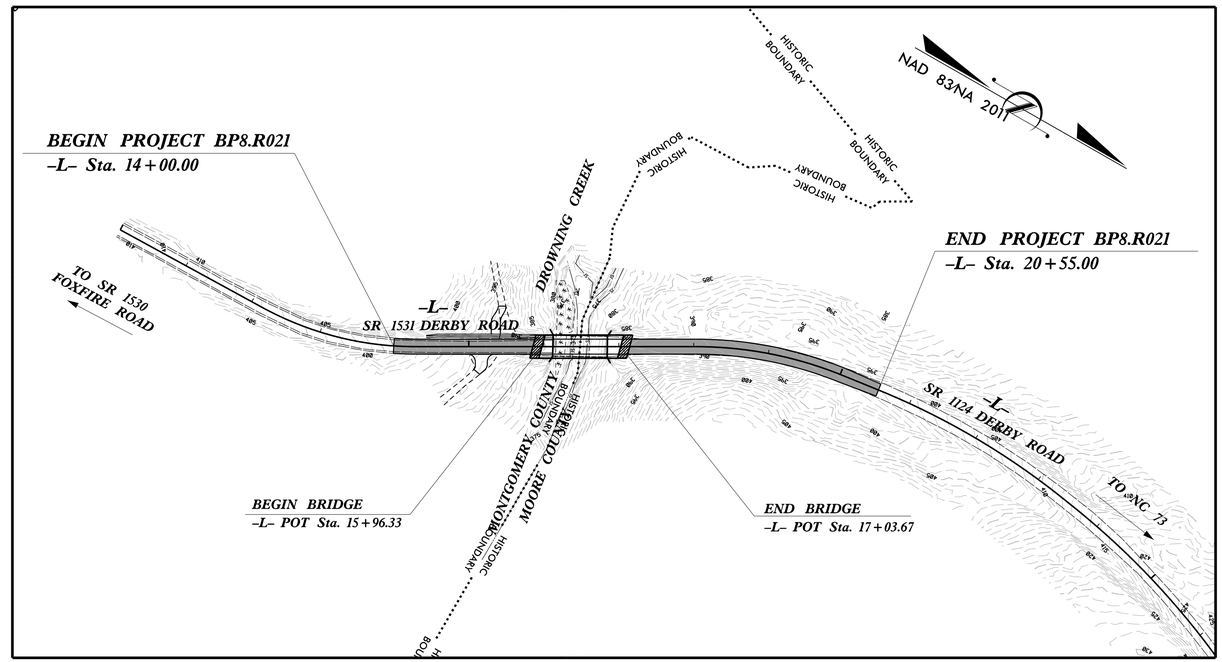

GRAPHIC SCALE

50 25 0 50 100

PLANS

THESE EROSION AND SEDIMENT CONTROL PLANS COMPLY WITH THE REGULATIONS SET FORTH BY THE NCG 010000 GENERAL STORMWATER CONSTRUCTION PERMIT ISSUED BY THE NORTH CAROLINA DEPARTMENT OF ENVIRONMENTAL QUALITY DIVISION OF ENERGY, MINERAL, AND LAND RESOURCES.

LEVEL III CERTIFIED BY:
KAREN HEFNER, PE
CERTIFICATION NUMBER: 3824
ISSUED: OCTOBER 8, 2024

Prepared in the Office of:

MI ENGINEERING, PLLC
1011 SCHAUB DR, SUITE 100
RALEIGH, NC 27606
(919) 851-6606
FIRM PE NUMBER: P-0671

Designed by:

KAREN HEFNER, PE *3824*
NAME *LEVEL III CERTIFICATION NO.*

MI ENGINEERING
1011 SCHAUB DRIVE, SUITE 100
RALEIGH, NC 27606
(919) 851-6606
FIRM PE NUMBER : P-0671

Roadway Standard Drawings

The "Roadway Standard Drawings"- Roadway Design Unit - N. C. Department of Transportation - Raleigh, N. C., dated January 2024 and the latest revison thereto are applicable to this project and by reference hereby are considered a part of these plans.

10/8/2024
R:\Hydraulics\M2021_Moore_26\Erosion Control\CADD\BP8.R021_EC_2024_1sh.dgn
MI\KERNAGE18

PROJECT REFERENCE NO.	SHEET NO.
BP8.R021	EC-02

DIVISION OF HIGHWAYS
STATE OF NORTH CAROLINA

EROSION & SEDIMENT CONTROL LEGEND

Std. #	Description	Symbol
1605.01	Temporary Silt Fence	
1606.01	Special Sediment Control Fence	
1622.01	Temporary Berms and Slope Drains	
1630.02	Silt Basin Type B	
1630.03	Temporary Silt Ditch	TSD
1630.04	Stilling Basin	
1630.05	Temporary Diversion	TD
1630.06	Special Stilling Basin	
1630.07	Skimmer Basin	
1630.08	Tiered Skimmer Basin	
1630.09	Earthen Dam with Skimmer	
	Infiltration Basin	
	Rock Inlet Sediment Trap:	
1632.01	Type A	A
1632.02	Type B	B
1632.03	Type C	C

Std. #	Description	Symbol
1633.01	Temporary Rock Silt Check Type A	
1633.02	Temporary Rock Silt Check Type B	
1633.03	Temporary Rock Silt Check Type A with Excelsior Matting and Flocculant	
1634.01	Temporary Rock Sediment Dam Type A	
1634.02	Temporary Rock Sediment Dam Type B	
1635.01	Rock Pipe Inlet Sediment Trap Type A	A
1635.02	Rock Pipe Inlet Sediment Trap Type B	B
1636.01	Excelsior Wattle Check	
1636.01	Excelsior Wattle Check with Flocculant	
1636.01	Coir Fiber Wattle Check	
1636.01	Coir Fiber Wattle Check with Flocculant	
1636.02	Silt Fence Excelsior Wattle Break	EW
	Silt Fence Coir Fiber Wattle Break	CFW
1636.03	Excelsior Wattle Barrier	—EW—EW—EW—
1636.03	Coir Fiber Wattle Barrier	—CFW—CFW—CFW—

10/8/2024
N:\NC_Hydro\M2102\Moore.26\Erosion Control\CADD\BP8.R021_EC_2024_tsh.dgn
$USERNAME$

PROJECT REFERENCE NO.	SHEET NO.
BP8.R021	EC-02A

ONSITE CONCRETE WASHOUT STRUCTURE WITH LINER

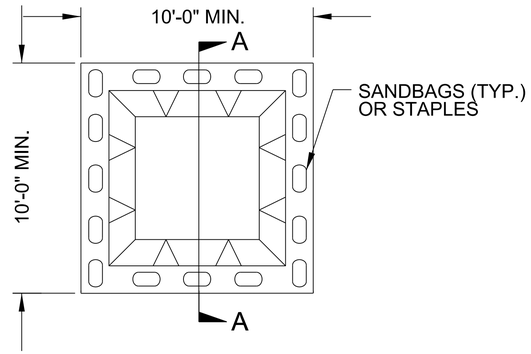

PLAN

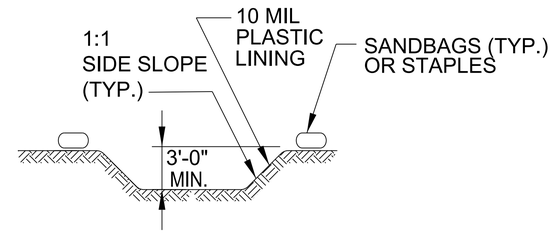

SECTION A-A

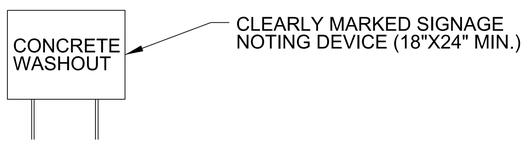

NOTES:
1. ACTUAL LOCATION DETERMINED IN FIELD

2. THE CONCRETE WASHOUT STRUCTURES SHALL BE MAINTAINED WHEN THE LIQUID AND/OR SOLID REACHES 75% OF THE STRUCTURES CAPACITY TO PROVIDE ADEQUATE HOLDING CAPACITY WITH A MINIMUM 12 INCHES OF FREEBOARD.

3.CONCRETE WASHOUT STRUCTURE NEEDS TO BE CLEARY MARKED WITH SIGNAGE NOTING DEVICE.

BELOW GRADE WASHOUT STRUCTURE

NOT TO SCALE

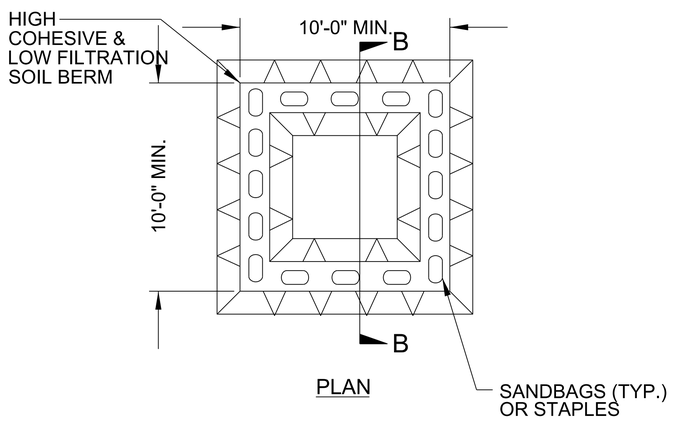

PLAN

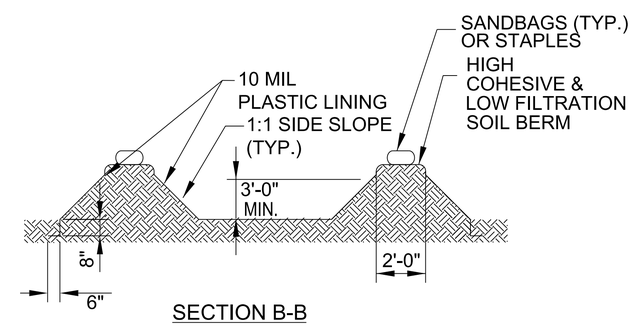

SECTION B-B

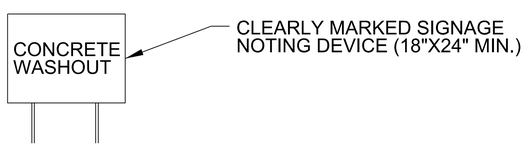

NOTES:
1. ACTUAL LOCATION DETERMINED IN FIELD

2. THE CONCRETE WASHOUT STRUCTURES SHALL BE MAINTAINED WHEN THE LIQUID AND/OR SOLID REACHES 75% OF THE STRUCTURES CAPACITY TO PROVIDE ADEQUATE HOLDING CAPACITY WITH A MINIMUM 12 INCHES OF FREEBOARD.

3.CONCRETE WASHOUT STRUCTURE NEEDS TO BE CLEARY MARKED WITH SIGNAGE NOTING DEVICE.

ABOVE GRADE WASHOUT STRUCTURE

NOT TO SCALE

DIVISION OF HIGHWAYS
STATE OF NORTH CAROLINA

SOIL STABILIZATION TIMEFRAMES

SITE DESCRIPTION	STABILIZATION TIME	TIMEFRAME EXCEPTIONS
PERIMETER DIKES, SWALES, DITCHES AND SLOPES	7 DAYS	NONE
HIGH QUALITY WATER (HQW) ZONES	7 DAYS	NONE
SLOPES STEEPER THAN 3:1	7 DAYS	IF SLOPES ARE 10' OR LESS IN LENGTH AND ARE NOT STEEPER THAN 2:1, 14 DAYS ARE ALLOWED.
SLOPES 3:1 TO 4:1	14 DAYS	7 DAYS FOR SLOPES GREATER THAN 50' IN LENGTH WITH SLOPES STEEPER THAN 4:1. 7 DAYS FOR PERIMETER DIKES, SWALES, DITCHES PERIMETER SLOPES, AND HQW ZONES
ALL OTHER AREAS WITH SLOPES FLATTER THAN 4:1	14 DAYS	7 DAYS FOR PERIMETER DIKES, SWALES, DITCHES PERIMETER SLOPES, AND HQW ZONES

PROJECT REFERENCE NO.	SHEET NO.
BP8.R021	EC-03A

DIVISION OF HIGHWAYS
STATE OF NORTH CAROLINA

SOIL STABILIZATION SUMMARY SHEET

MATTING FOR EROSION CONTROL (SLOPES)

CONST SHEET NO.	LINE	FROM STATION	TO STATION	SIDE	ESTIMATE (SY)
4	-L-	15+60	15+87	LT	30
4	-L-	17+00	19+25	RT	1,010
		SUBTOTAL - SLOPES			1,040

MATTING FOR EROSION CONTROL (DITCHES)

CONST SHEET NO.	LINE	FROM STATION	TO STATION	SIDE	ESTIMATE (SY)
4	-L-	18+25	19+50	LT	100
4	-L-	17+75	20+50	RT	215
		SUBTOTAL - DITCHES			315
		SUBTOTAL - SLOPES			1,040
MISCELLANEOUS MATTING TO BE INSTALLED AS DIRECTED BY THE ENGINEER					7,175
				TOTAL	8,530
				SAY	8,530

10/8/2024
N:\NC Hydro\M2102L_Moore_26\Erosion Control\CADD\BP8.R02L.EC03A_Matting_Slope Protection.dgn
$(USERNAME)$

NOTE: ALL EROSION CONTROL DEVICES SHOWN ARE LOCATED WITHIN EXISTING R/W OR EASEMENT.

NOTE: PERIMETER EROSION CONTROL MEASURES SHALL BE INSTALLED DURING CLEARING AND GRUBBING PHASE.

NOTE: PRIOR TO INSTALLATION OF EROSION CONTROL DEVICES, CONTRACTOR SHALL VERIFY BOUNDARIES OF JURISDICTIONAL AREAS AND DELINEATE WITH SAFETY FENCE OR FLAGGING.

NOTE: CONTRACTOR SHALL PROVIDE GROUND COVER ON EXPOSED SLOPES IN ACCORDANCE WITH THE "SOIL STABILIZATION TIMEFRAMES", SEE EC-3.

NOTE: PLACE TEMPORARY ROCK SEDIMENT DAMS TYPE – B AND TEMPORARY ROCK SILT CHECKS TYPE – A AT DRAINAGE OUTLETS.

CH ENGINEERING
DIVISION OF PENNONI
5430 WADE PARK BLVD., SUITE 106,
RALEIGH, NC 27607
919.788.0224
NC LICENSE #P-0189

MI ENGINEERING
1011 SCHAUB DRIVE, SUITE 100
RALEIGH, NC 27606
(919) 851-6606
FIRM PE NUMBER : P-0671

PROJECT REFERENCE NO.	SHEET NO.
BP8.R021	EC-04/CONST.04

MOORE COUNTY BRIDGE #26

ROADSIDE ENVIRONMENTAL PROJECT ENGINEER

LEVEL III CERTIFIED BY:
KAREN HEFNER, PE
CERTIFICATION NUMBER: 3824
ISSUED: OCTOBER 8, 2024

CLEARING AND GRUBBING
EROSION CONTROL FOR
CONSTRUCTION SHEET 04

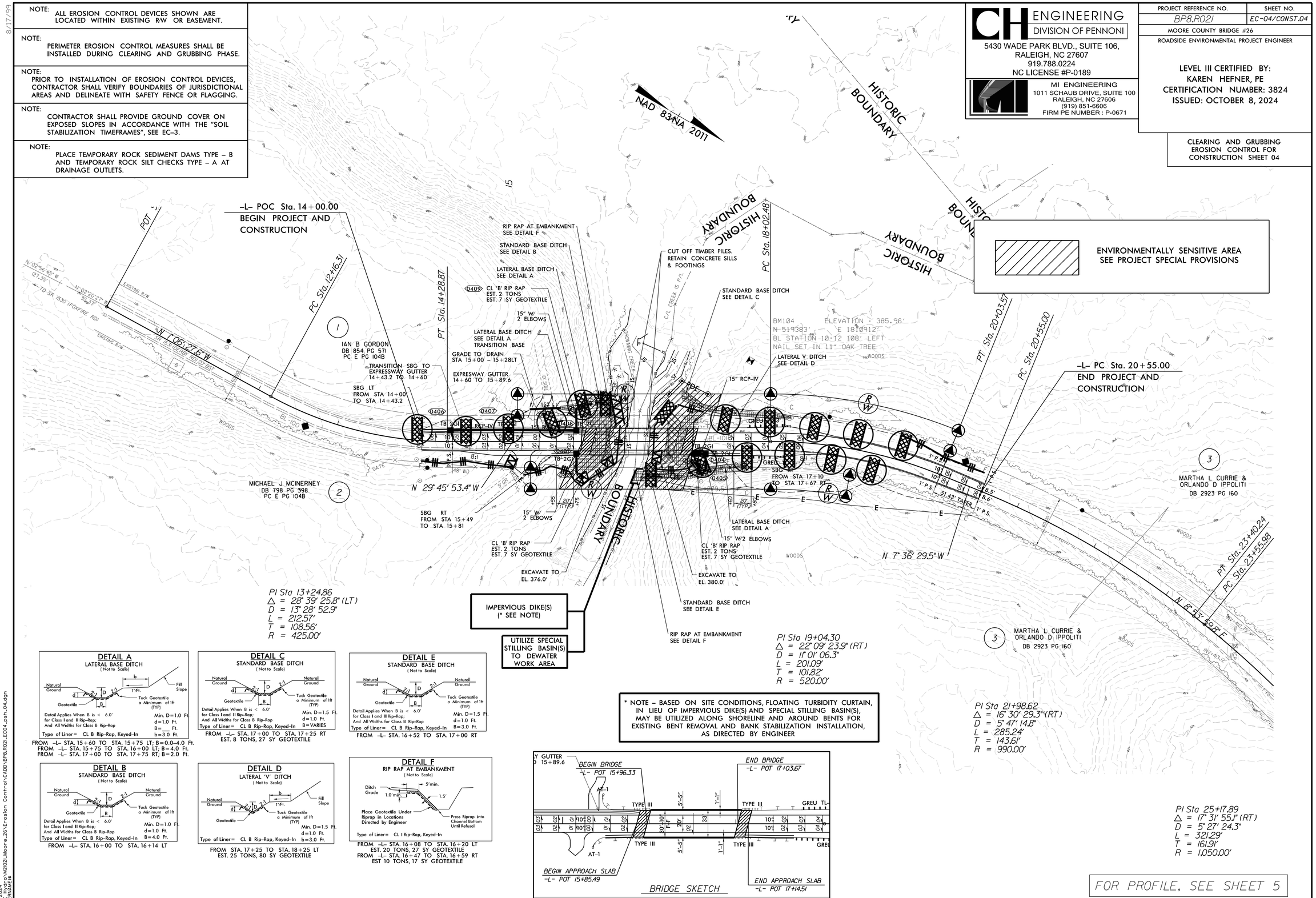

* NOTE – BASED ON SITE CONDITIONS, FLOATING TURBIDITY CURTAIN, IN LIEU OF IMPERVIOUS DIKE(S) AND SPECIAL STILLING BASIN(S), MAY BE UTILIZED ALONG SHORELINE AND AROUND BENTS FOR EXISTING BENT REMOVAL AND BANK STABILIZATION INSTALLATION, AS DIRECTED BY ENGINEER

DETAIL A
LATERAL BASE DITCH
(Not to Scale)

FROM –L– STA. 15+60 TO STA. 15+75 LT; B=0.0–4.0 Ft.
FROM –L– STA. 15+75 TO STA. 16+00 LT; B=4.0 Ft.
FROM –L– STA. 17+00 TO STA. 17+75 RT; B=2.0 Ft.

DETAIL C
STANDARD BASE DITCH
(Not to Scale)

FROM –L– STA. 17+00 TO STA. 17+25 RT
EST. 8 TONS, 27 SY GEOTEXTILE

DETAIL E
STANDARD BASE DITCH
(Not to Scale)

FROM –L– STA. 16+52 TO STA. 17+00 RT

DETAIL B
STANDARD BASE DITCH
(Not to Scale)

FROM –L– STA. 16+00 TO STA. 16+14 LT

DETAIL D
LATERAL 'V' DITCH
(Not to Scale)

FROM STA. 17+25 TO STA. 18+25 LT
EST. 25 TONS, 80 SY GEOTEXTILE

DETAIL F
RIP RAP AT EMBANKMENT
(Not to Scale)

FROM –L– STA. 16+08 TO STA. 16+20 LT
EST. 20 TONS, 27 SY GEOTEXTILE
FROM –L– STA. 16+47 TO STA. 16+59 RT
EST 10 TONS, 17 SY GEOTEXTILE

10/8/2024
N:\Hydro\Proj\M2021_Moore_26\Erosion Control\CADD\BP8.R021.EC04.psh_04.dgn
$USERNAME$

8/17/99

CH ENGINEERING
DIVISION OF PENNONI
5430 WADE PARK BLVD., SUITE 106,
RALEIGH, NC 27607
919.788.0224
NC LICENSE #P-0189

MI ENGINEERING
1011 SCHAUB DRIVE, SUITE 100
RALEIGH, NC 27606
(919) 851-6606
FIRM PE NUMBER : P-0671

PROJECT REFERENCE NO.	SHEET NO.
BP8.R021	EC-05/CONST.04

MOORE COUNTY BRIDGE #26

ROADSIDE ENVIRONMENTAL PROJECT ENGINEER

LEVEL III CERTIFIED BY:
KAREN HEFNER, PE
CERTIFICATION NUMBER: 3824
ISSUED: OCTOBER 8, 2024

FINAL EROSION CONTROL FOR CONSTRUCTION SHEET 04

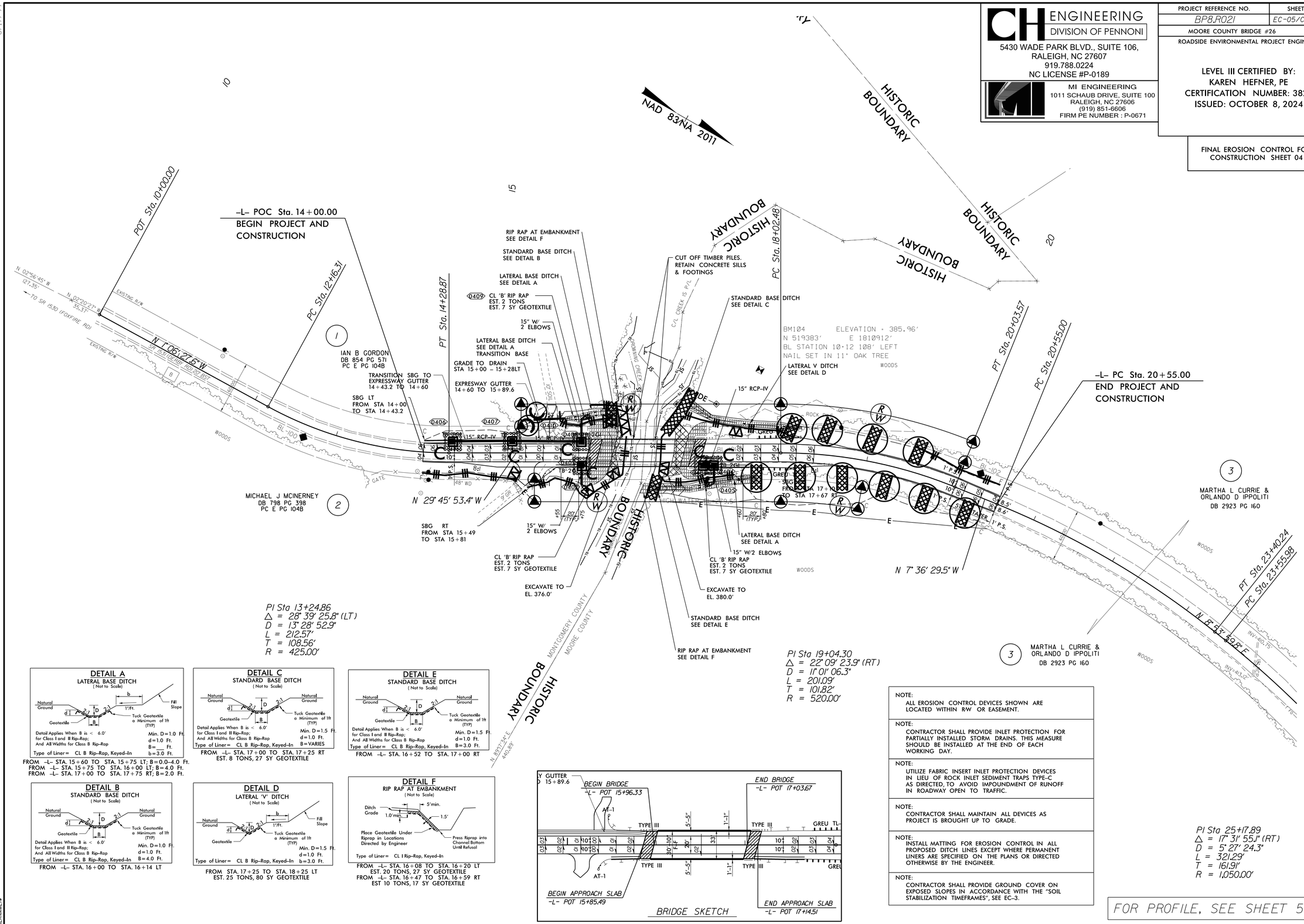

DETAIL A
LATERAL BASE DITCH
(Not to Scale)

Natural Ground; Geotextile; Fill Slope; 1'/Ft.; Tuck Geotextile a Minimum of 1ft (TYP)

Detail Applies When B is < 6.0' for Class I and II Rip-Rap; And All Widths for Class B Rip-Rap

Min. D=1.0 Ft. d=1.0 Ft. B=___ Ft. b=3.0 Ft.

Type of Liner= CL B Rip-Rap, Keyed-In

FROM –L– STA. 15+60 TO STA. 15+75 LT; B=0.0–4.0 Ft.
FROM –L– STA. 15+75 TO STA. 16+00 LT; B=4.0 Ft.
FROM –L– STA. 17+00 TO STA. 17+75 RT; B=2.0 Ft.

DETAIL B
STANDARD BASE DITCH
(Not to Scale)

Natural Ground; Geotextile; Tuck Geotextile a Minimum of 1ft (TYP)

Detail Applies When B is < 6.0' for Class I and II Rip-Rap; And All Widths for Class B Rip-Rap

Min. D=1.0 Ft. d=1.0 Ft. B=4.0 Ft.

Type of Liner= CL B Rip-Rap, Keyed-In

FROM –L– STA. 16+00 TO STA. 16+14 LT

DETAIL C
STANDARD BASE DITCH
(Not to Scale)

Natural Ground; Geotextile; Tuck Geotextile a Minimum of 1ft (TYP)

Detail Applies When B is < 6.0' for Class I and II Rip-Rap; And All Widths for Class B Rip-Rap

Min. D=1.5 Ft. d=1.0 Ft. B=VARIES

Type of Liner= CL B Rip-Rap, Keyed-In

FROM –L– STA. 17+00 TO STA. 17+25 RT
EST. 8 TONS, 27 SY GEOTEXTILE

DETAIL D
LATERAL 'V' DITCH
(Not to Scale)

Natural Ground; Geotextile; Fill Slope; 1'/Ft.; Tuck Geotextile a Minimum of 1ft (TYP)

Min. D=1.5 Ft. d=1.0 Ft. b=3.0 Ft.

Type of Liner= CL B Rip-Rap, Keyed-In

FROM STA. 17+25 TO STA. 18+25 LT
EST. 25 TONS, 80 SY GEOTEXTILE

DETAIL E
STANDARD BASE DITCH
(Not to Scale)

Natural Ground; Geotextile; Tuck Geotextile a Minimum of 1ft (TYP)

Detail Applies When B is < 6.0' for Class I and II Rip-Rap; And All Widths for Class B Rip-Rap

Min. D=1.5 Ft. d=1.0 Ft. B=3.0 Ft.

Type of Liner= CL B Rip-Rap, Keyed-In

FROM –L– STA. 16+52 TO STA. 17+00 RT

DETAIL F
RIP RAP AT EMBANKMENT
(Not to Scale)

Ditch Grade; 1.0'min.; 5'min.; 1.5'; Place Geotextile Under Riprap in Locations Directed by Engineer; Press Riprap into Channel Bottom Until Refusal

Type of Liner= CL I Rip-Rap, Keyed-In

FROM –L– STA. 16+08 TO STA. 16+20 LT
EST. 20 TONS, 27 SY GEOTEXTILE
FROM –L– STA. 16+47 TO STA. 16+59 RT
EST 10 TONS, 17 SY GEOTEXTILE

NOTE:
ALL EROSION CONTROL DEVICES SHOWN ARE LOCATED WITHIN R/W OR EASEMENT.

NOTE:
CONTRACTOR SHALL PROVIDE INLET PROTECTION FOR PARTIALLY INSTALLED STORM DRAINS. THIS MEASURE SHOULD BE INSTALLED AT THE END OF EACH WORKING DAY.

NOTE:
UTILIZE FABRIC INSERT INLET PROTECTION DEVICES IN LIEU OF ROCK INLET SEDIMENT TRAPS TYPE-C AS DIRECTED, TO AVOID IMPOUNDMENT OF RUNOFF IN ROADWAY OPEN TO TRAFFIC.

NOTE:
CONTRACTOR SHALL MAINTAIN ALL DEVICES AS PROJECT IS BROUGHT UP TO GRADE.

NOTE:
INSTALL MATTING FOR EROSION CONTROL IN ALL PROPOSED DITCH LINES EXCEPT WHERE PERMANENT LINERS ARE SPECIFIED ON THE PLANS OR DIRECTED OTHERWISE BY THE ENGINEER.

NOTE:
CONTRACTOR SHALL PROVIDE GROUND COVER ON EXPOSED SLOPES IN ACCORDANCE WITH THE "SOIL STABILIZATION TIMEFRAMES", SEE EC-3.

10/8/2024
N:\Hydro\Moore\M2021\Moore_26\Erosion Control\CADD\BP8.R021.EC05.psh_04.dgn
$USERNAME$

09/08/99

PROJECT: BP8.R021

CONTRACT:

STATE OF NORTH CAROLINA
DIVISION OF HIGHWAYS

T.I.P. NO.	SHEET NO.
BP8.R021	UO–1

NOTE:
ALL UTILITY WORK SHOWN ON THIS SHEET WILL BE DONE BY OTHERS. NO PAYMENT WILL BE MADE TO THE CONTRACTOR FOR UTILITY WORK SHOWN ON THIS SHEET.

UTILITIES BY OTHERS PLANS
MOORE & MONTGOMERY COUNTIES

LOCATION: BRIDGE 620026 OVER DROWNING CREEK ON SR 1124/SR 1531 (DERBY ROAD)

TYPE OF WORK: UTILITIES BY OTHERS

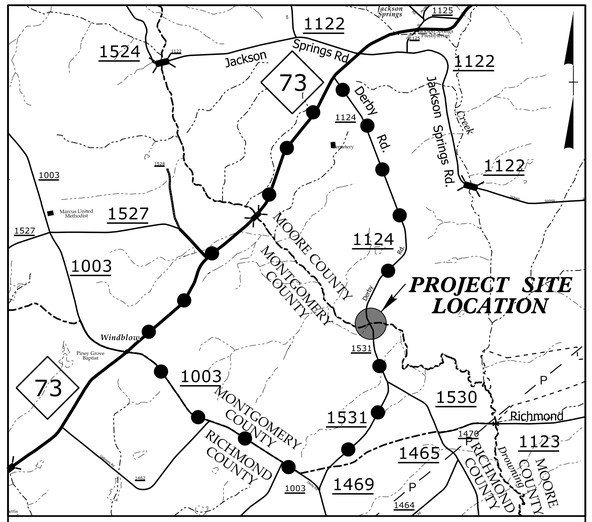

VICINITY MAP

OFF-SITE DETOUR ROUTE

N.T.S.

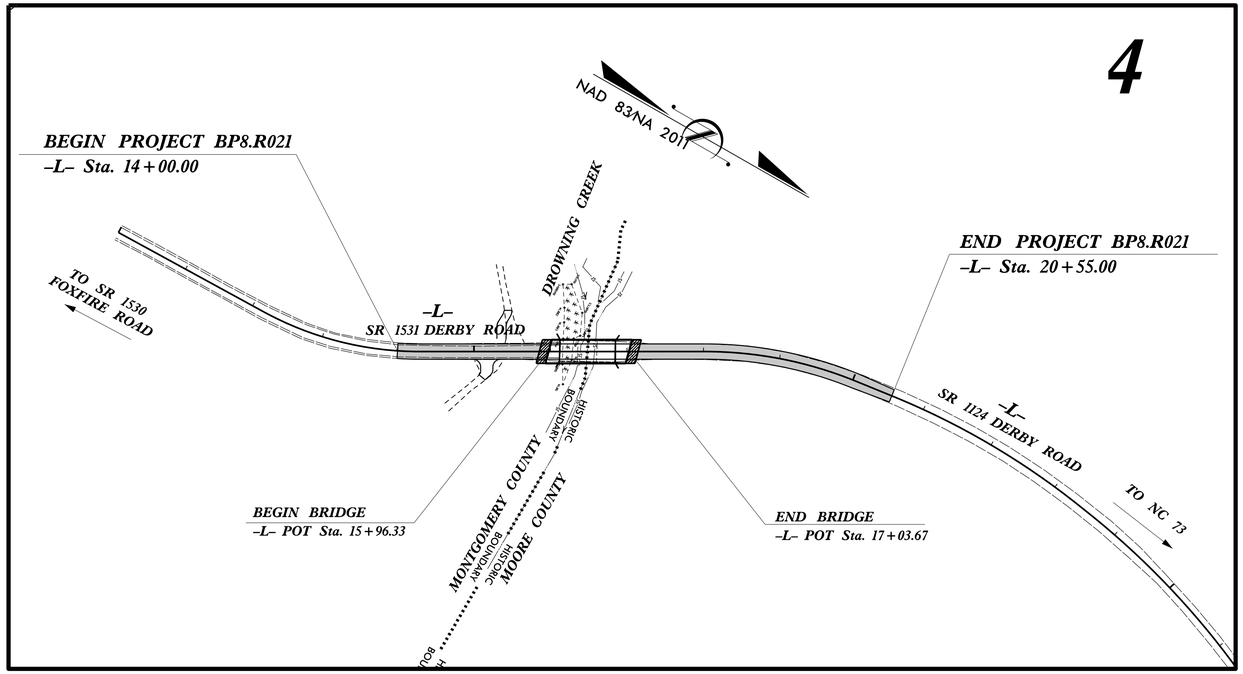

DOCUMENT NOT CONSIDERED FINAL UNLESS ALL SIGNATURES COMPLETED

GRAPHIC SCALES

50 25 0 50 100
PLANS

50 25 0 50 100
PROFILE (HORIZONTAL)

10 5 0 10 20
PROFILE (VERTICAL)

INDEX OF SHEETS

SHEET NO.:	DESCRIPTION:
UO–1	TITLE SHEET
UO–2	UBO PLAN SHEET

UTILITY OWNERS WITH CONFLICTS

(A) POWER – PEE DEE EMC
(B) COMMUNICATION – BRIGHTSPEED

PREPARED IN THE OFFICE OF:

Pennoni

PENNONI ASSOCIATES INC.
5430 WADE PARK BLVD., SUITE 106,
RALEIGH, NC 27607
(919) 929-1173 NC LICENSE #F-1267

BRIAN WILES, PE	UTILITY PROJECT MANAGER
LEVI SMITH	PROJECT UTILITY COORDINATOR

DIVISION OF HIGHWAYS
DIVISION 8

121 DOT DRIVE
CARTHAGE NC 28327

TIM WELCH, PE	DIV. BRIDGE PROG. MANAGER
MICHAEL RICKETTS	DIV. UTILITIES ENGINEER
TRENT CAVINESS	DIV. UTILITIES COORDINATOR

1/15/2025
R:\Utilities\Engineering\UBO\Proj\620026_ut_tsh_U01_psh.dgn
USERNAME

PROJECT REFERENCE NO.	SHEET NO.
BP8.R021	U0-2
THIS SHEET CORRESPONDS TO RDY-04	

UTILITIES BY OTHERS

ALL PROPOSED UTILITY WORK SHOWN ON THIS SHEET WILL BE DONE BY OTHERS. NO PAYMENT WILL BE MADE TO THE CONTRACTOR FOR PROPOSED UTILITY WORK SHOWN ON THIS SHEET.

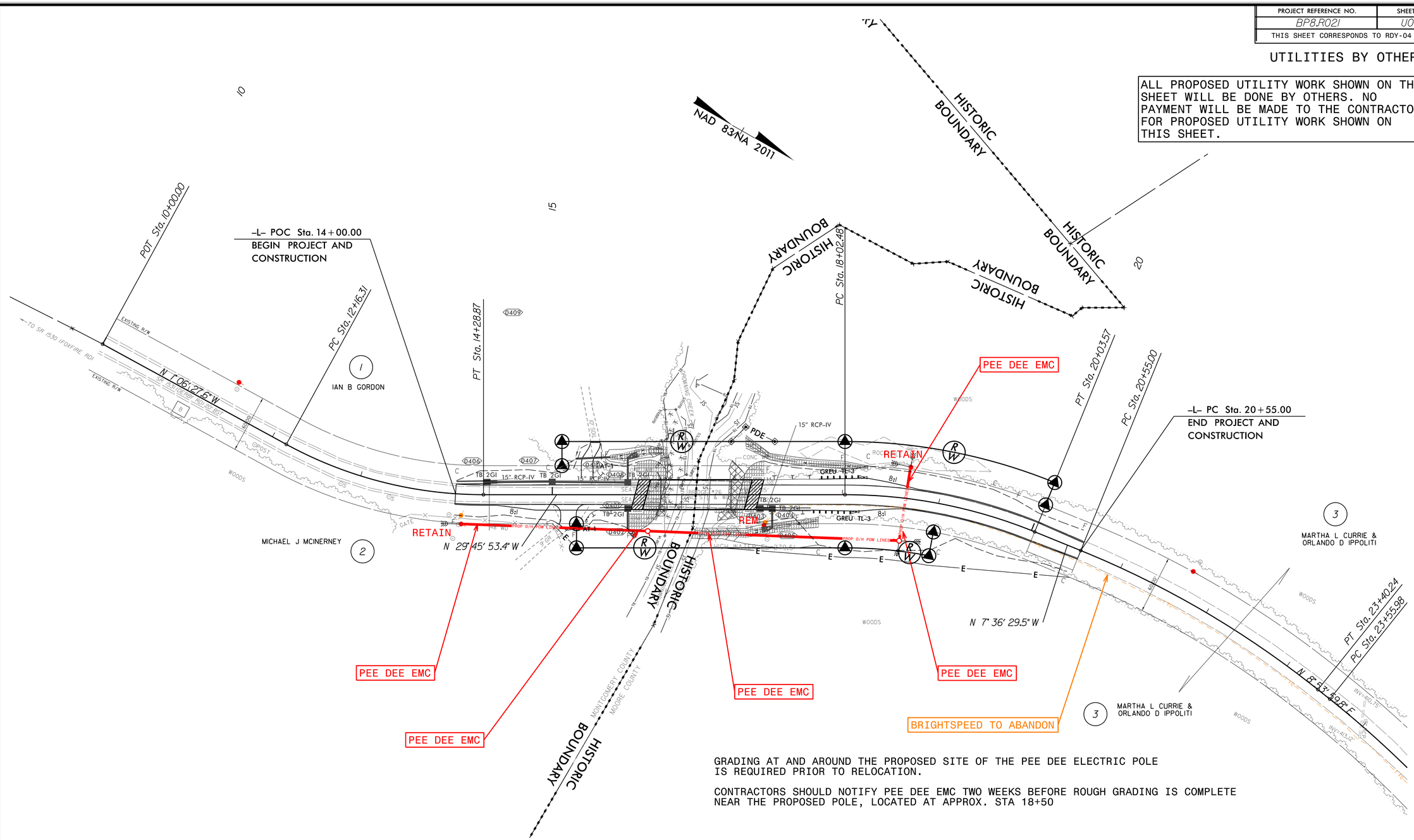

GRADING AT AND AROUND THE PROPOSED SITE OF THE PEE DEE ELECTRIC POLE IS REQUIRED PRIOR TO RELOCATION.

CONTRACTORS SHOULD NOTIFY PEE DEE EMC TWO WEEKS BEFORE ROUGH GRADING IS COMPLETE NEAR THE PROPOSED POLE, LOCATED AT APPROX. STA 18+50

Pennoni
PENNONI ASSOCIATES INC.
5430 WADE PARK BLVD., SUITE 106,
RALEIGH, NC 27607
(919) 929-1173 NC LICENSE #F-1267

6/23/16

0 2.5 5	PROJ. REFERENCE NO.	SHEET NO.
	BP8.R021	X-1

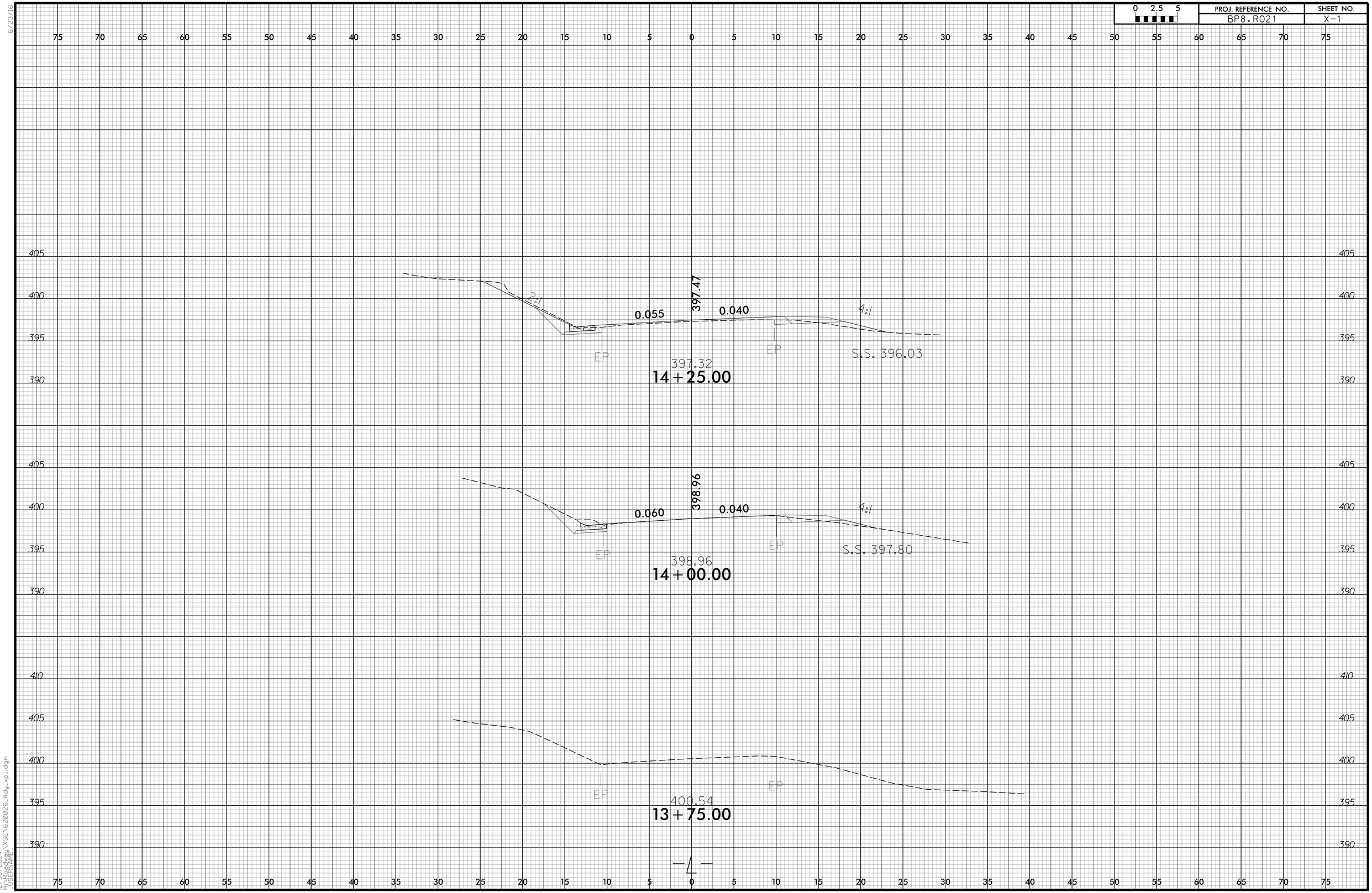

12/30/2024
R:\SERRA\Rdy\WSC\620826_Rdy_xpl.dgn
USERNAME

0 2.5 5	PROJ. REFERENCE NO.	SHEET NO.
	BP8.R021	X-2

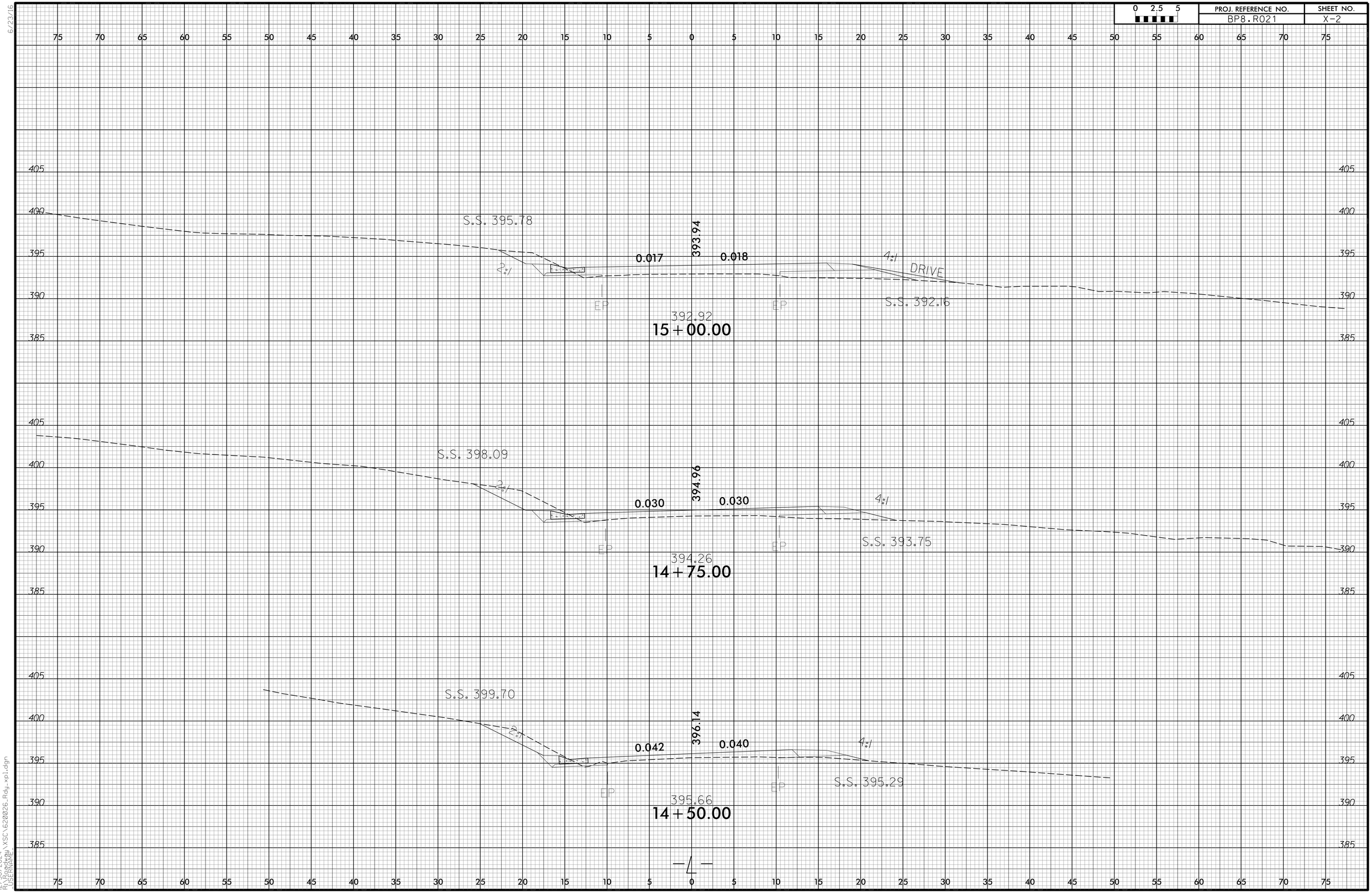

6/23/16

12/30/2024
R:\3_Design\XSC\620026_Rdg_xpl.dgn
USERNAME

0 2.5 5	PROJ. REFERENCE NO.	SHEET NO.
	BP8.R021	X-3

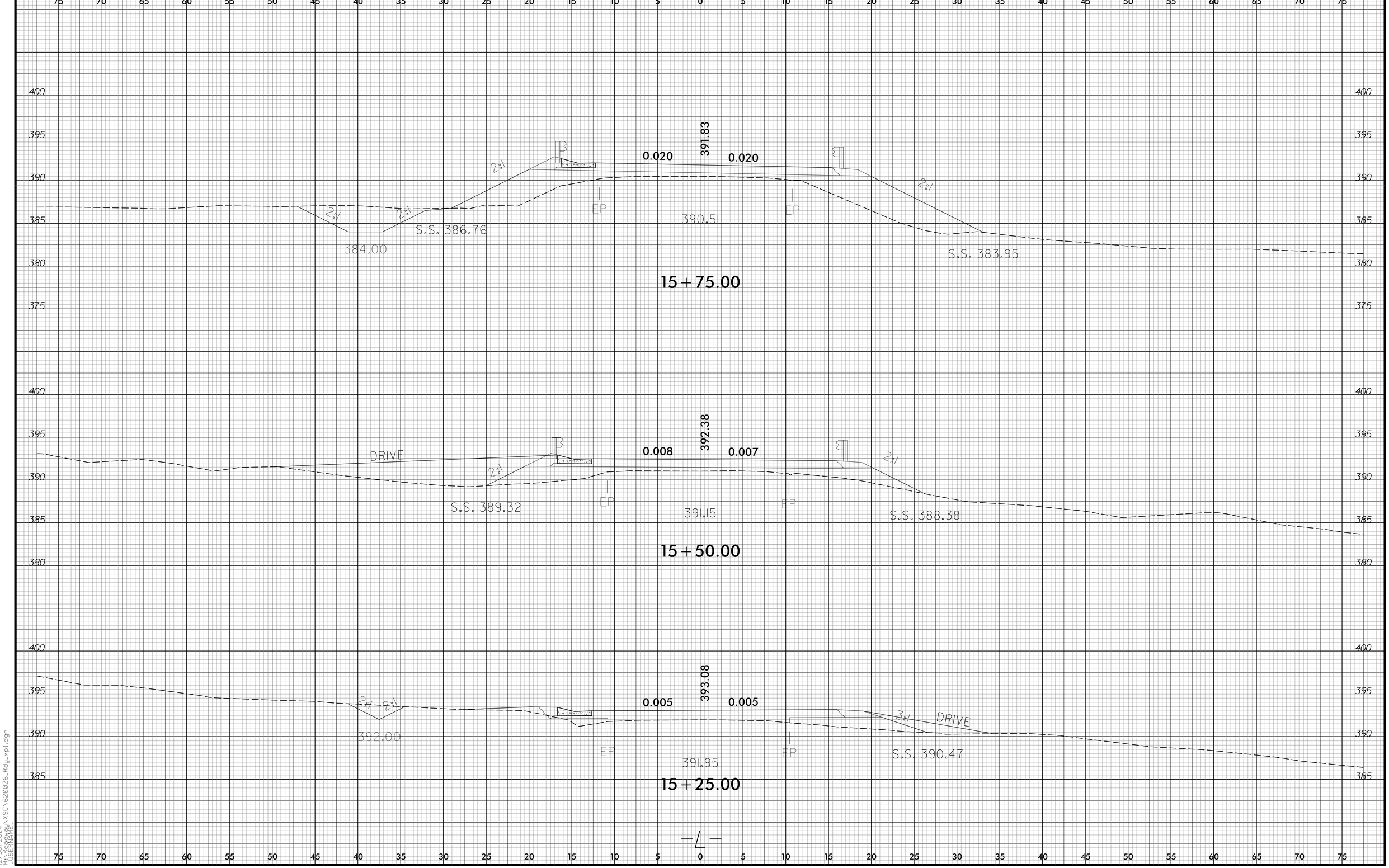

6/23/16

12/30/2024
R:\Projects\XSC\620026_Rdg_xpl.dgn
USERNAME

6/23/16

0 2.5 5	PROJ. REFERENCE NO.	SHEET NO.
	BP8.R021	X-4

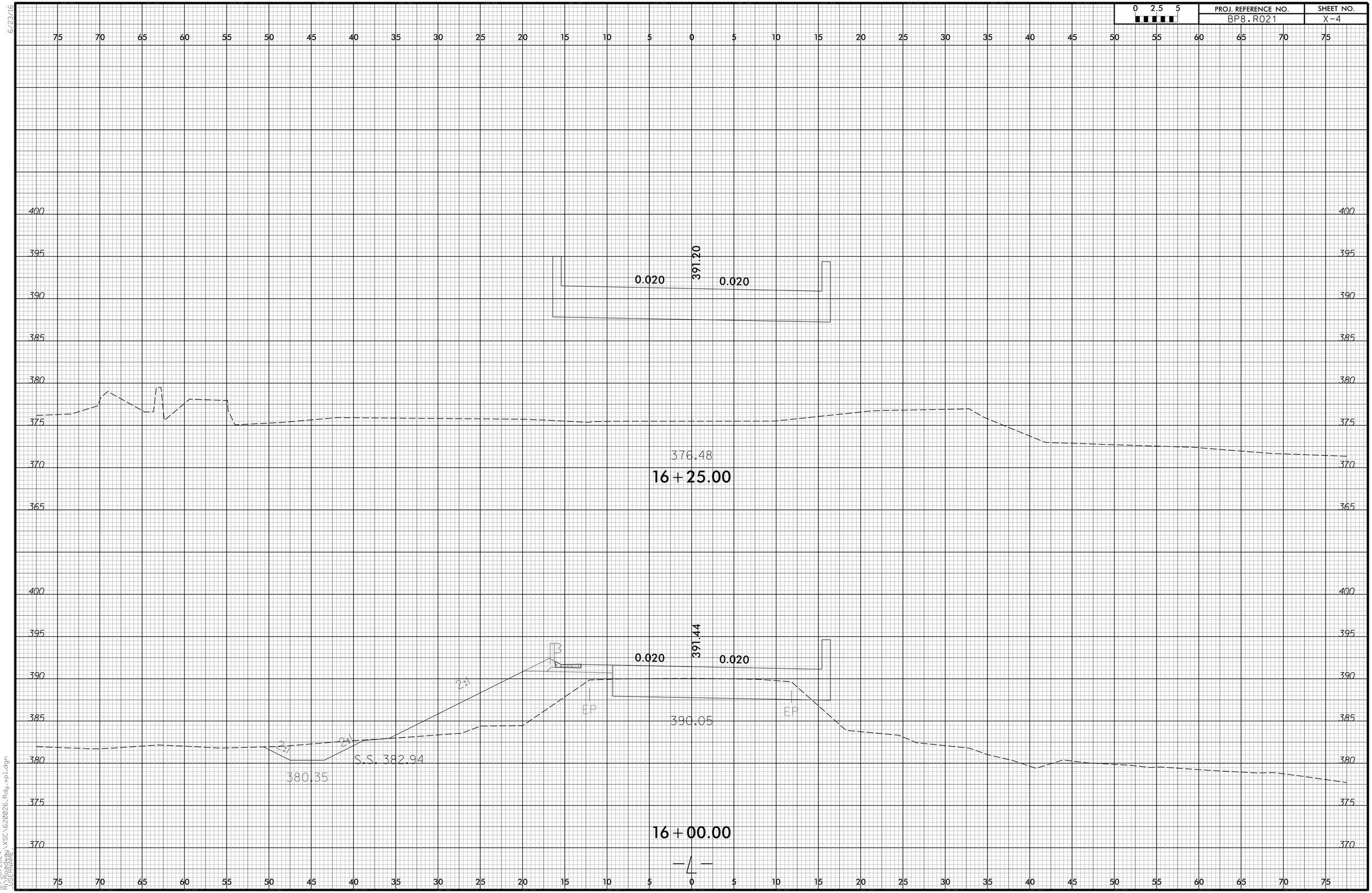

12/30/2024
R:\Projects\XSC\620026_Rdg_xpl.dgn
USERNAME

6/23/16

0 2.5 5	PROJ. REFERENCE NO.	SHEET NO.
	BP8.R021	X-5

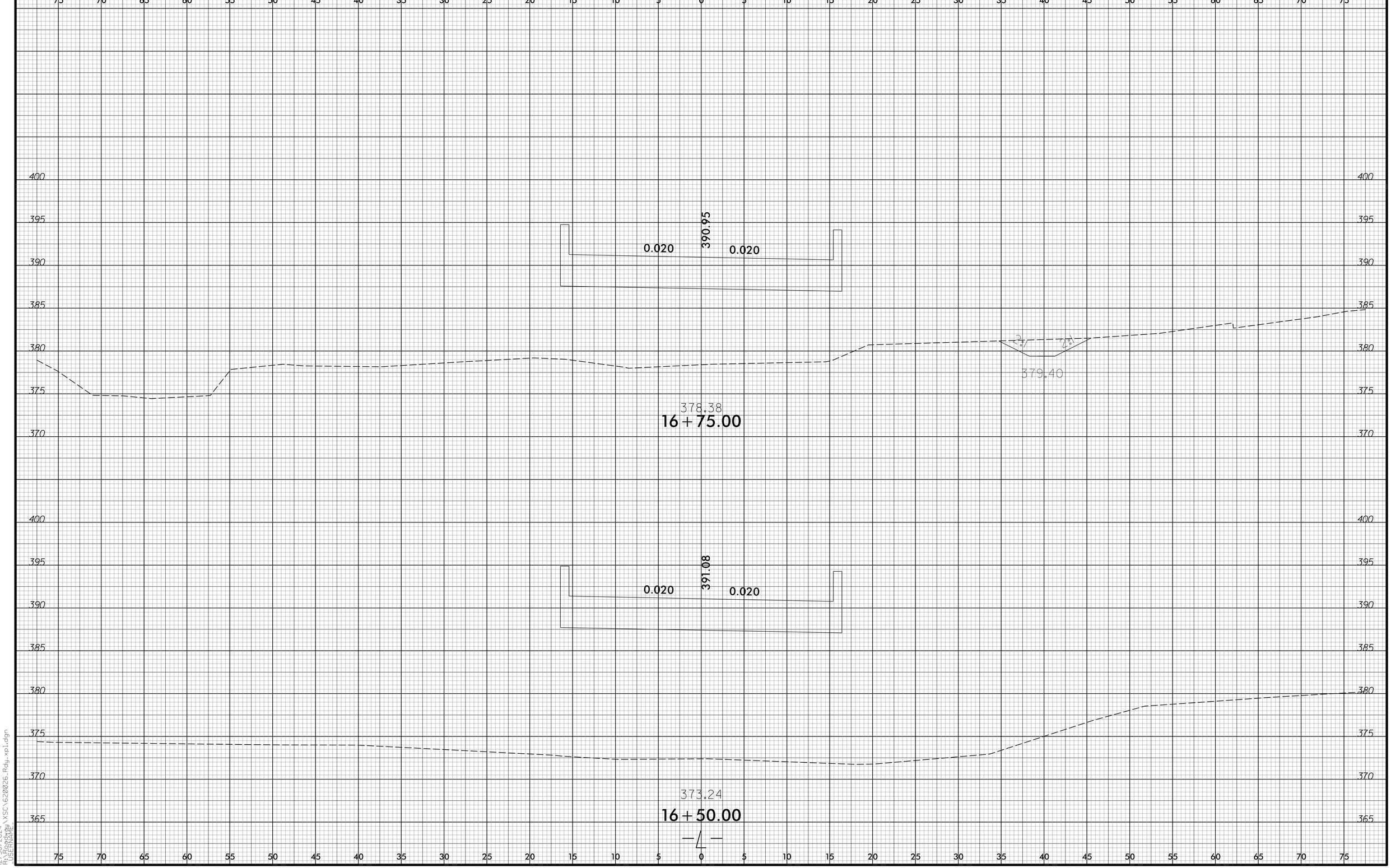

12/30/2024
R:\SERRA\Rd\VSC\620026_Rdy_xpl.dgn
USERNAME

6/23/16

0 2.5 5	PROJ. REFERENCE NO.	SHEET NO.
	BP8.R021	X-6

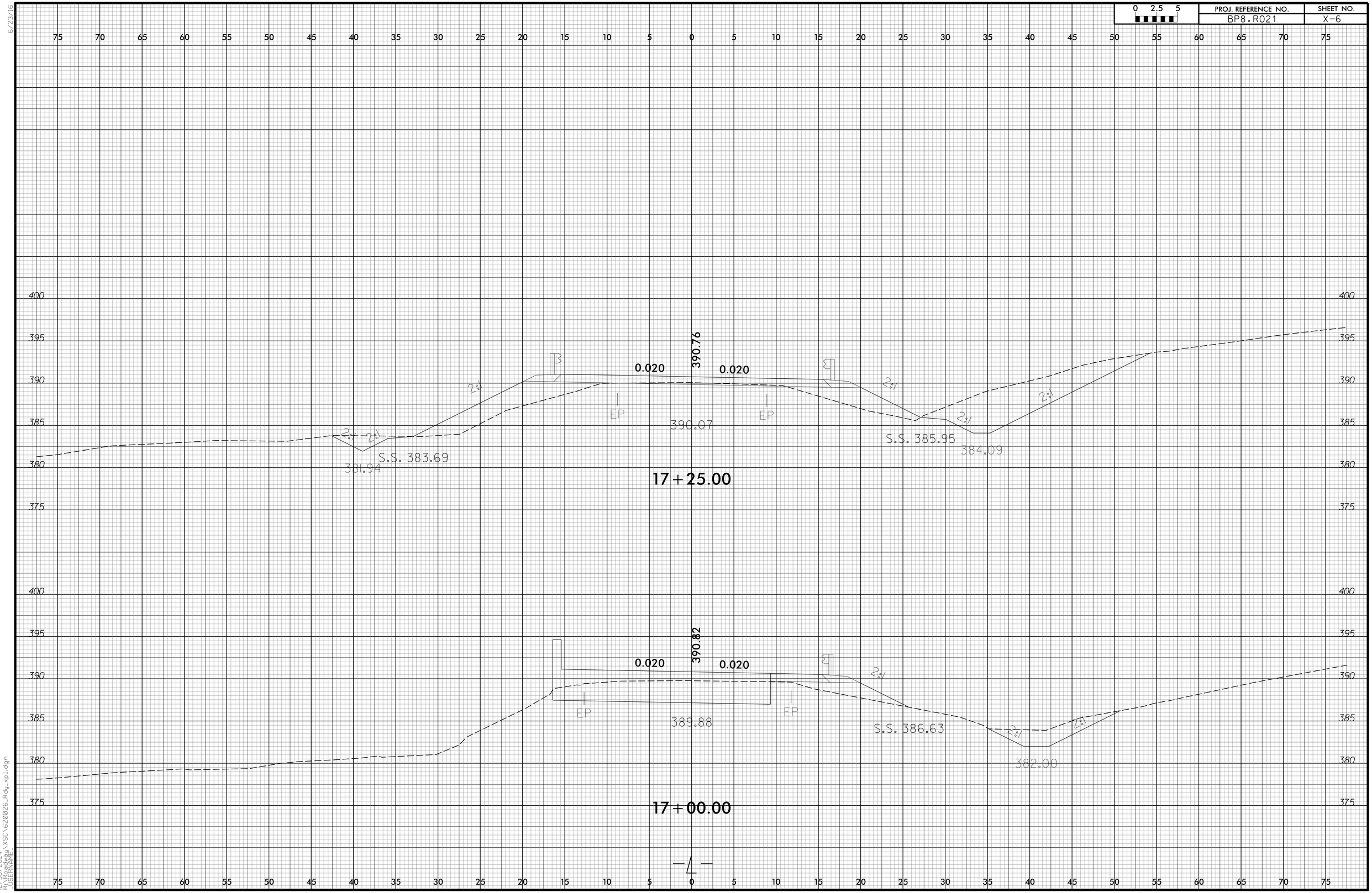

12/30/2024
R:\SERRAL\Alt VSC\620826_Rdy_xpl.dgn
USERNAME

6/23/16

0 2.5 5	PROJ. REFERENCE NO.	SHEET NO.
	BP8.R021	X-7

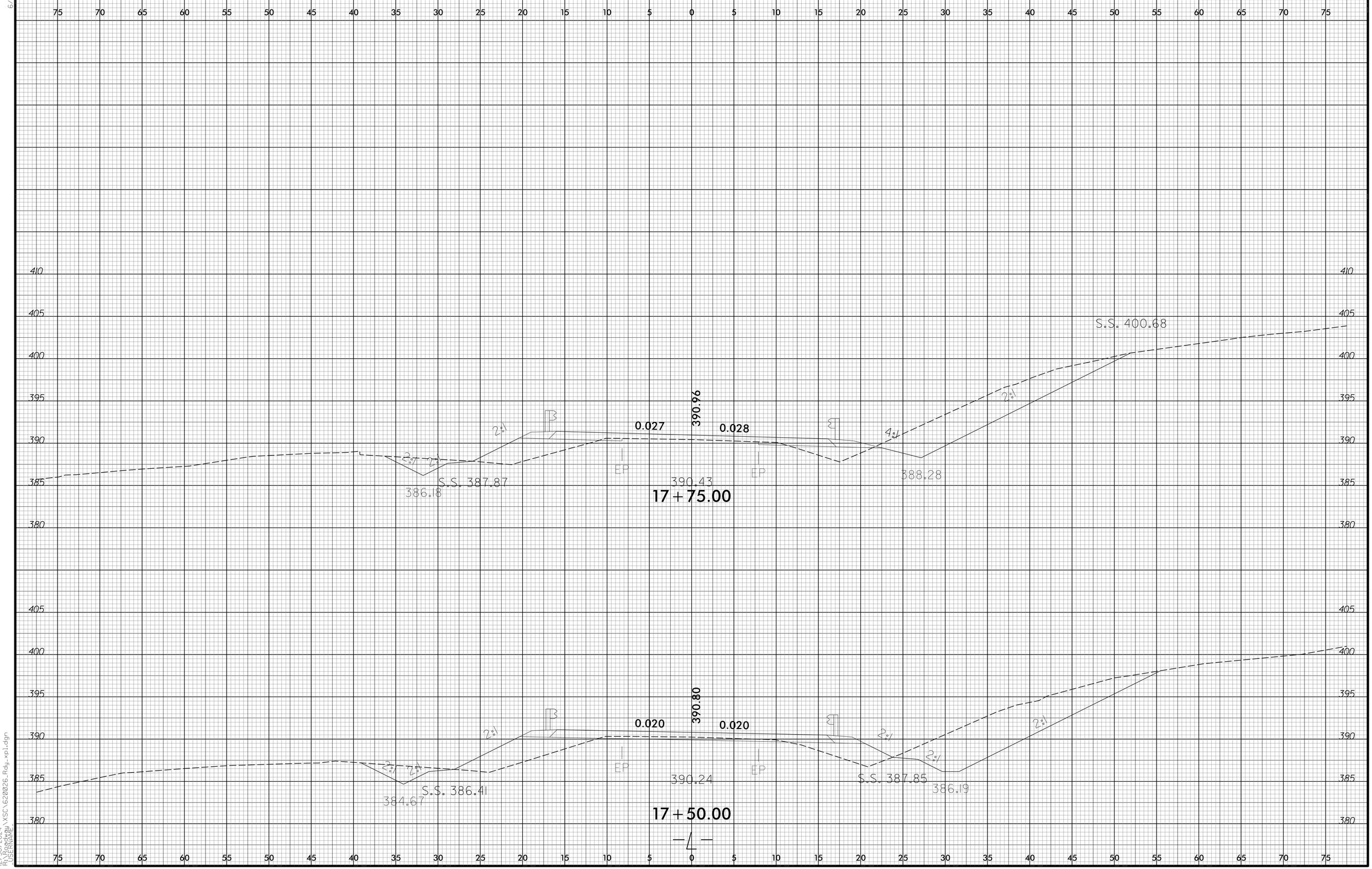

12/30/2024
R:\SERRANO\Roadway\VSC\620826_Rdy_xpl.dgn
USERNAME=

0 2.5 5	PROJ. REFERENCE NO.	SHEET NO.
	BP8.R021	X-8

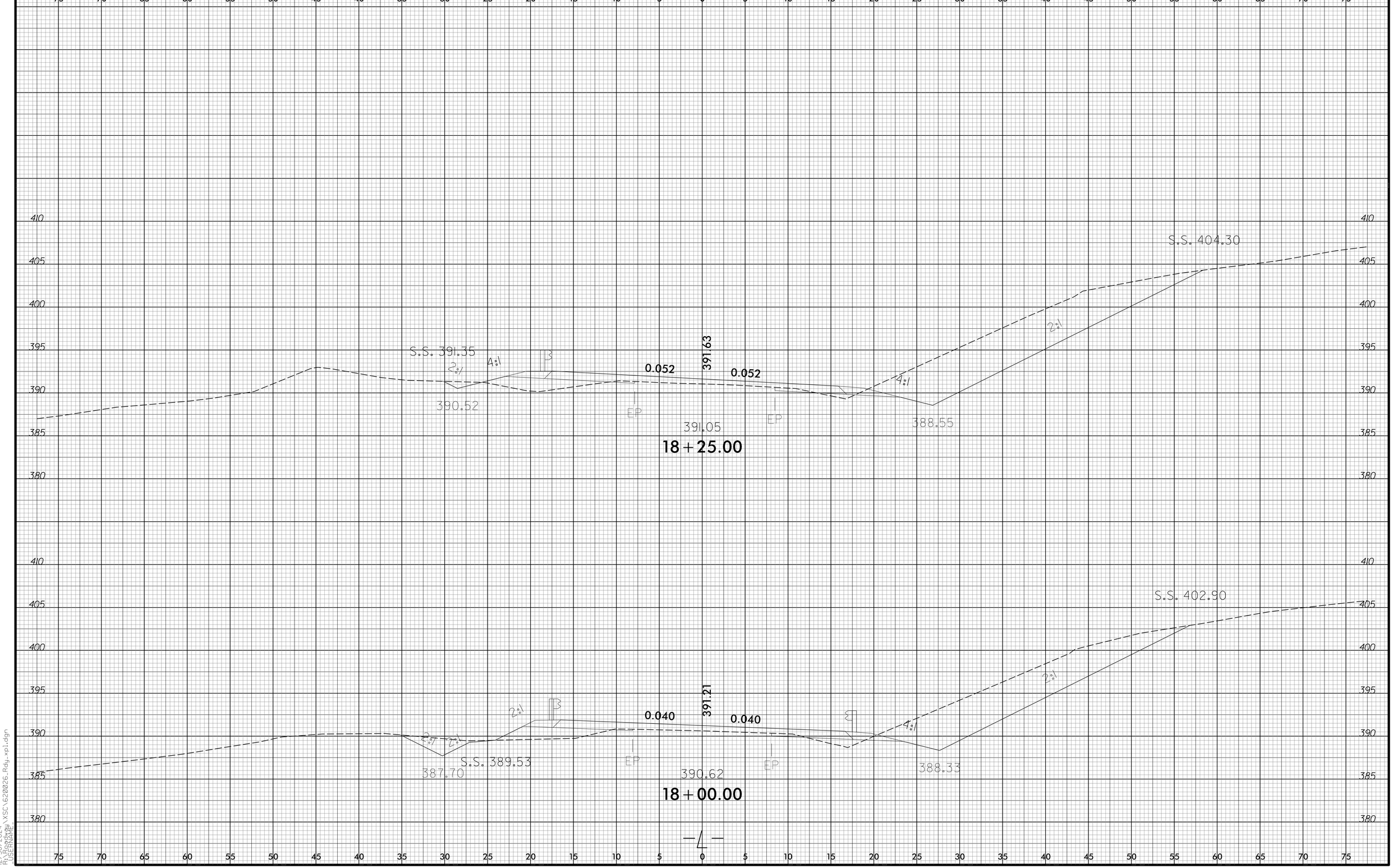

6/23/16

12/30/2024
RESERVED
USERNAME
MicroStation V8 \XSC\620026_Rdy_xpl.dgn

6/23/16

0 2.5 5	PROJ. REFERENCE NO.	SHEET NO.
	BP8.R021	X-9

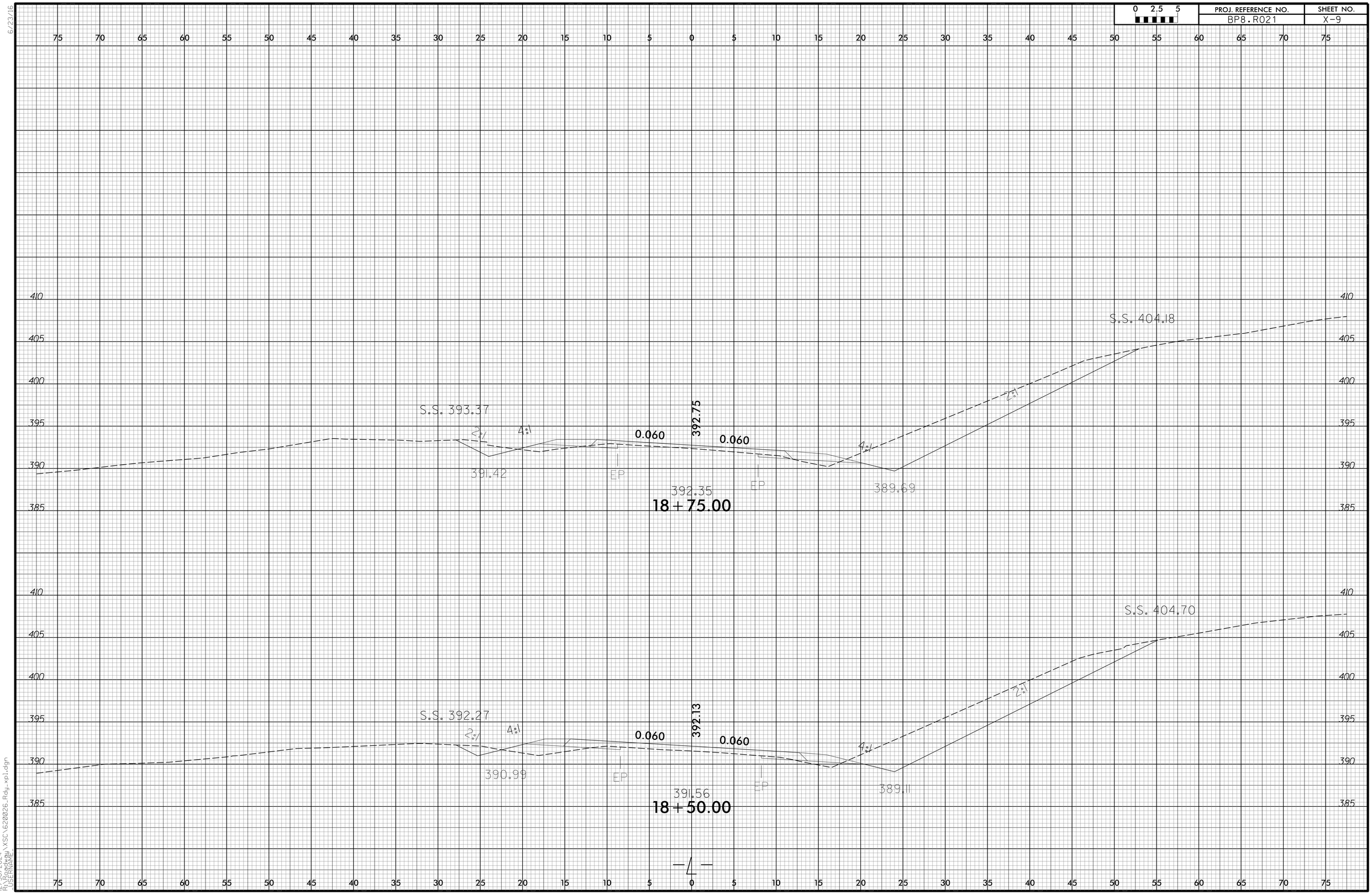

12/30/2024
R:\Roadway\XSC\620026_Rdy_xpl.dgn
USERNAME

6/23/16

0 2.5 5	PROJ. REFERENCE NO.	SHEET NO.
	BP8.R021	X-10

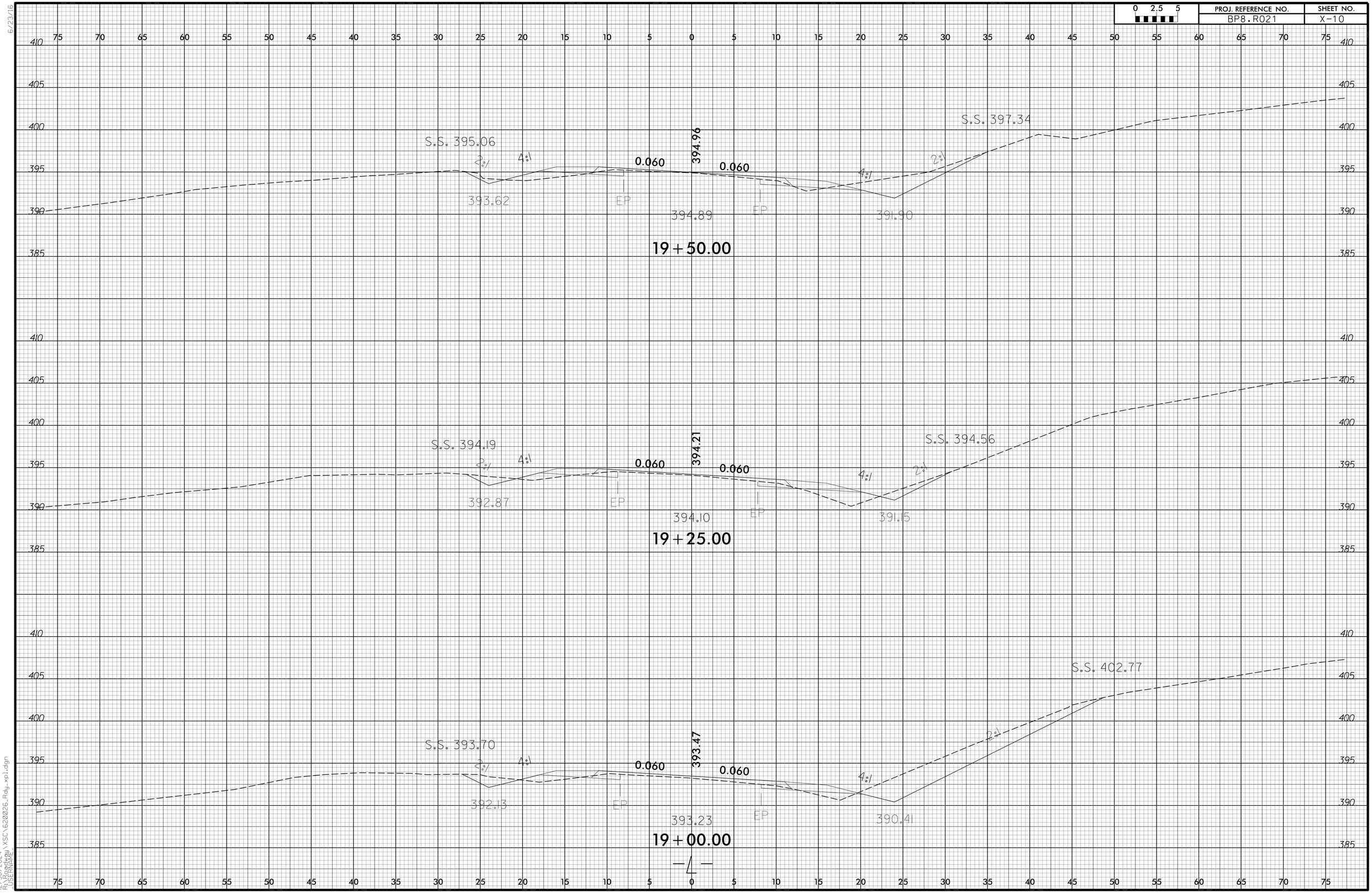

12/30/2024
R:\SERRA\Alt\VSC\620026_Rdy_xpl.dgn
USERNAME=

0 2.5 5	PROJ. REFERENCE NO.	SHEET NO.
	BP8.R021	X-11

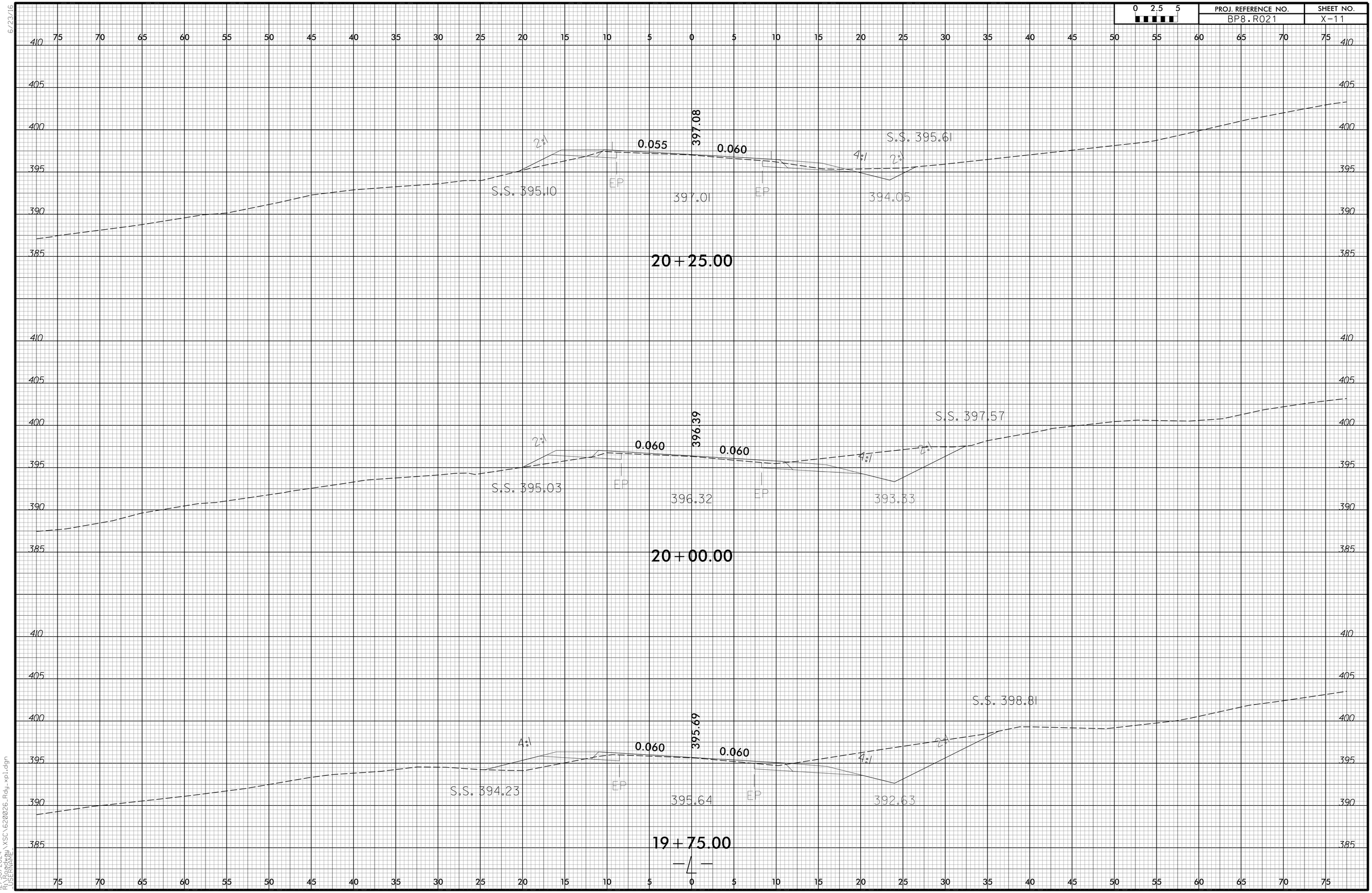

6/23/16

12/30/2024
R:\Projects\XSC\620026_Rdy_xpl.dgn
USERNAME

6/23/16

0 2.5 5	PROJ. REFERENCE NO.	SHEET NO.
	BP8.R021	X-12

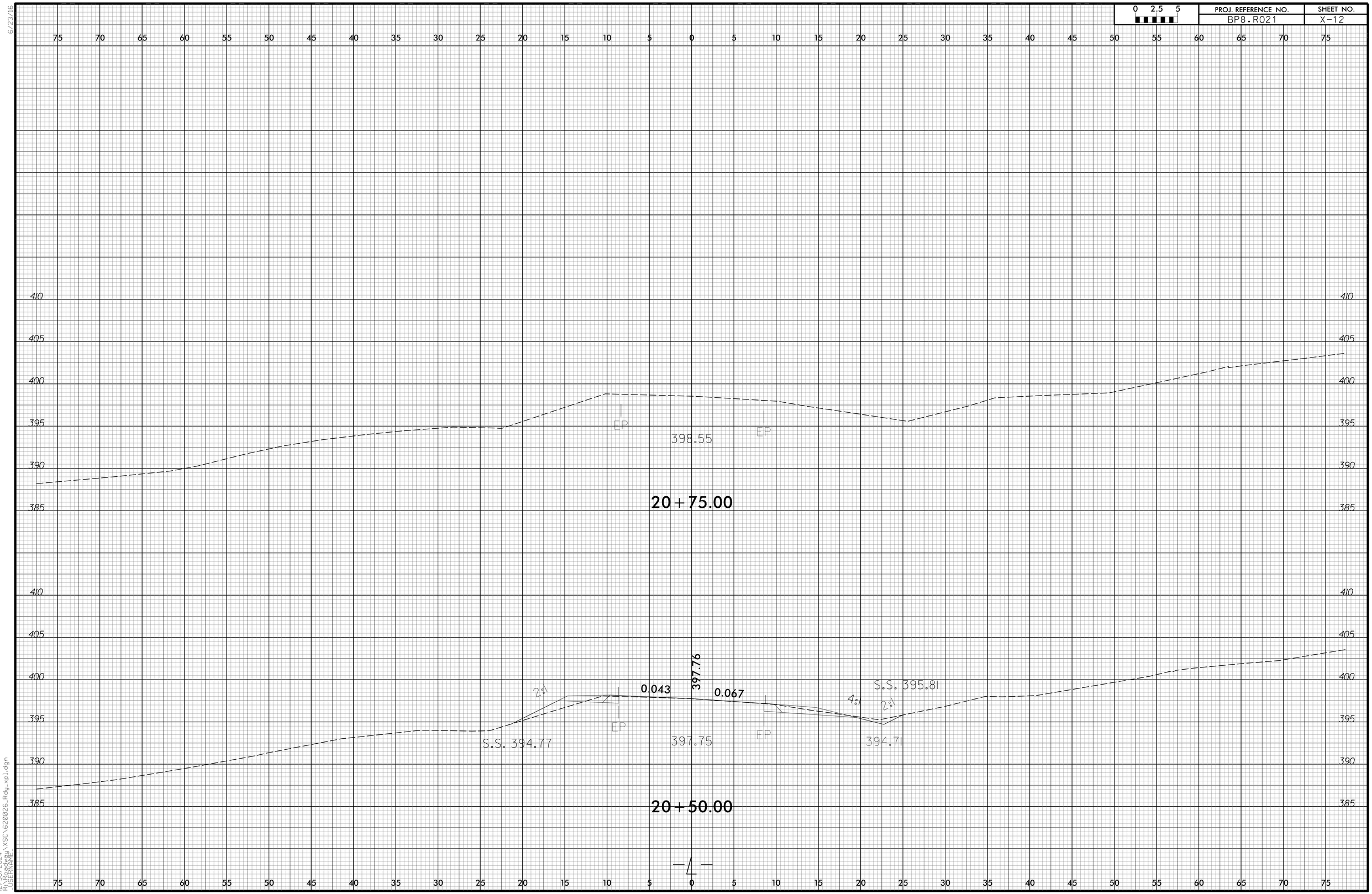

12/30/2024
R:\SERRA\Alt\VSC\620826_Rdy_xpl.dgn
USERNAME

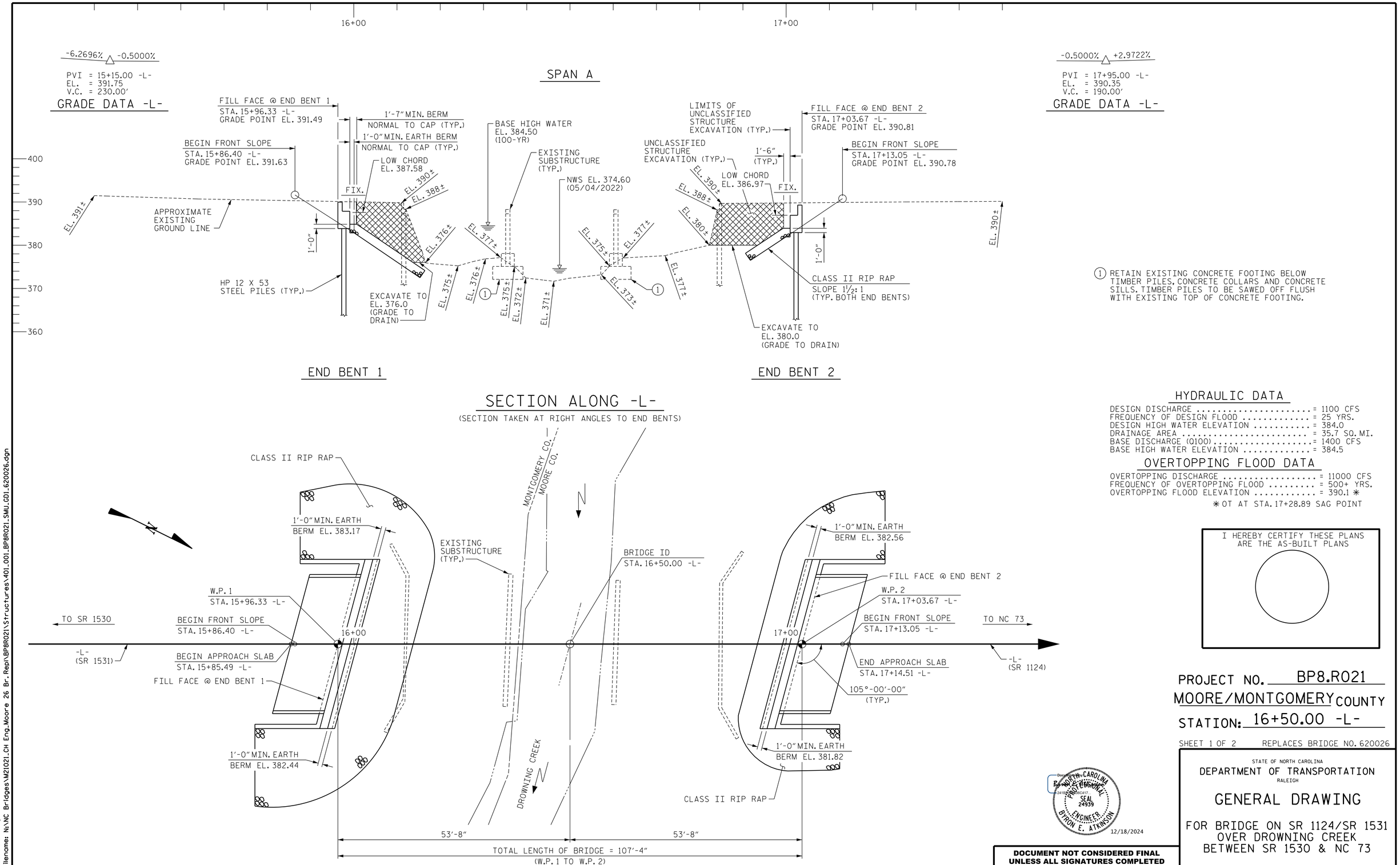

① RETAIN EXISTING CONCRETE FOOTING BELOW TIMBER PILES, CONCRETE COLLARS AND CONCRETE SILLS. TIMBER PILES TO BE SAWED OFF FLUSH WITH EXISTING TOP OF CONCRETE FOOTING.

HYDRAULIC DATA

DESIGN DISCHARGE	= 1100 CFS
FREQUENCY OF DESIGN FLOOD	= 25 YRS.
DESIGN HIGH WATER ELEVATION	= 384.0
DRAINAGE AREA	= 35.7 SQ. MI.
BASE DISCHARGE (Q100)	= 1400 CFS
BASE HIGH WATER ELEVATION	= 384.5

OVERTOPPING FLOOD DATA

OVERTOPPING DISCHARGE	= 11000 CFS
FREQUENCY OF OVERTOPPING FLOOD	= 500+ YRS.
OVERTOPPING FLOOD ELEVATION	= 390.1 ✱

✱ OT AT STA. 17+28.89 SAG POINT

I HEREBY CERTIFY THESE PLANS ARE THE AS-BUILT PLANS

PROJECT NO. BP8.R021

MOORE/MONTGOMERY COUNTY

STATION: 16+50.00 -L-

SHEET 1 OF 2 REPLACES BRIDGE NO. 620026

STATE OF NORTH CAROLINA
DEPARTMENT OF TRANSPORTATION
RALEIGH

GENERAL DRAWING

FOR BRIDGE ON SR 1124/SR 1531
OVER DROWNING CREEK
BETWEEN SR 1530 & NC 73

NORTH CAROLINA PROFESSIONAL SEAL 24939 ENGINEER BYRON E. ATKINSON
12/18/2024

DOCUMENT NOT CONSIDERED FINAL UNLESS ALL SIGNATURES COMPLETED

MI ENGINEERING
1011 SCHAUB DRIVE, SUITE 100
RALEIGH, NC 27606
(919) 851-6606
FIRM PE NUMBER : P-0671

REVISIONS								SHEET NO.
NO.	BY:	DATE:	NO.	BY:	DATE:			S-1
1			3					TOTAL SHEETS
2			4					19

DRAWN BY :	B.E. LANNING	DATE :	12/2024
CHECKED BY :	B.E. ATKINSON	DATE :	12/2024
DESIGN ENGINEER OF RECORD :	B.E. ATKINSON	DATE :	12/2024

12/18/2024
2:53:11 PM
User: blanning
Filename: N:\NC Bridges\M21021_CH Eng_Moore 26 Br. Rep\BP8R021\Structures\401_001_BP8R021_SMU_GD1_620026.dgn

B.M. #104: NAIL SET IN 11" OAK TREE, 93.37' LT. OF STA. 17+19.19 -L-, EL. 385.96

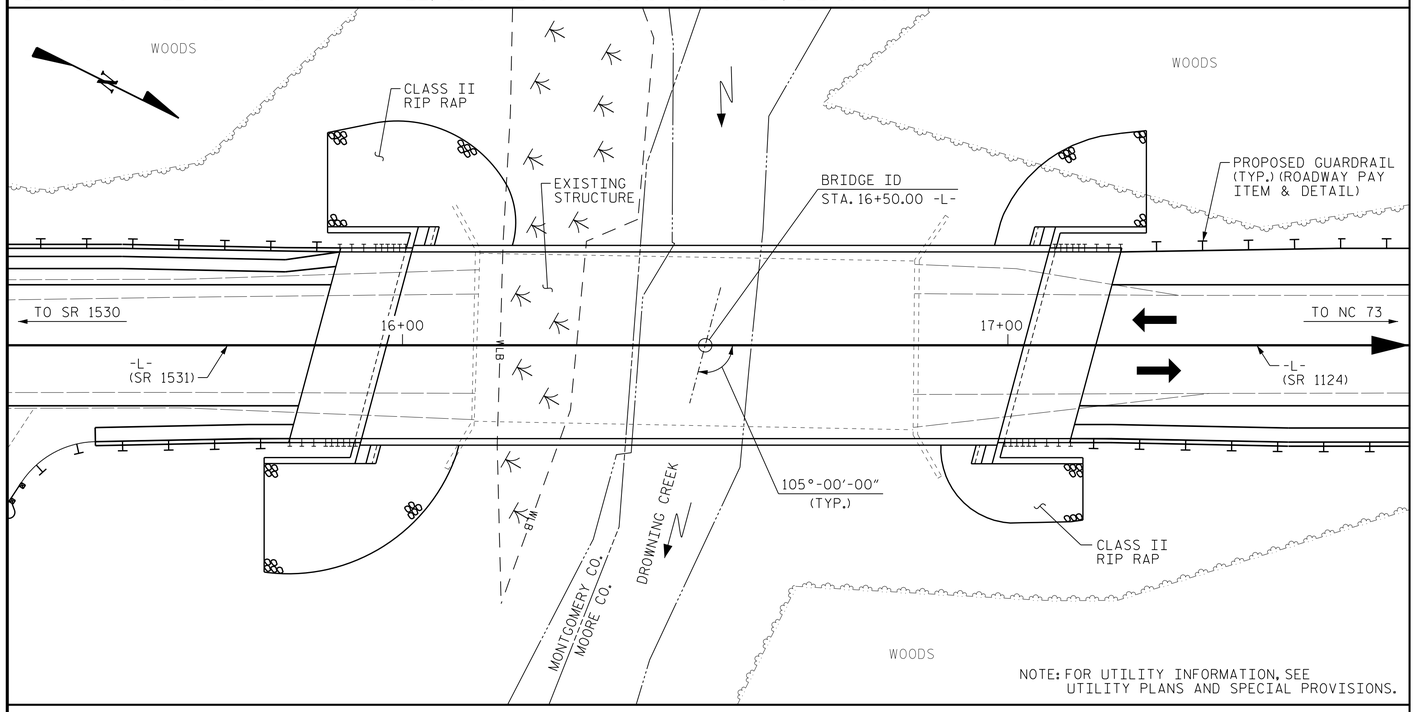

LOCATION SKETCH

NOTES

ASSUMED LIVE LOAD = HL 93 OR ALTERNATE LOADING.

THIS BRIDGE HAS BEEN DESIGNED IN ACCORDANCE WITH THE AASHTO LRFD BRIDGE DESIGN SPECIFICATIONS.

THIS BRIDGE IS LOCATED IN SEISMIC ZONE 2.

FOR OTHER DESIGN DATA AND GENERAL NOTES, SEE SHEET SN.

FOR EROSION CONTROL MEASURES, SEE EROSION CONTROL PLANS.

INASMUCH AS THE PAINT SYSTEM ON THE EXISTING STRUCTURAL STEEL CONTAINS LEAD, THE CONTRACTOR'S ATTENTION IS DIRECTED TO ARTICLE 107-1 OF THE STANDARD SPECIFICATIONS. ANY COSTS RESULTING FROM COMPLIANCE WITH APPLICABLE STATE OR FEDERAL REGULATIONS PERTAINING TO HANDLING OF MATERIALS CONTAINING LEAD BASED PAINT SHALL BE INCLUDED IN THE BID PRICE FOR "REMOVAL OF EXISTING STRUCTURE AT STATION 16+50.00 -L-."

THE EXISTING STRUCTURE CONSISTING OF THREE SPANS (1 @ 24'-4", 1 @ 25'-1" AND 1 @ 24'-4"), WITH ASPHALT WEARING SURFACE ON STEEL PLANK DECK AND STEEL I-BEAMS AND A CLEAR ROADWAY WIDTH OF 28'-3" ON STEEL I-BEAM CAPS AND MASS CONCRETE ABUTMENTS; TIMBER CAP WITH TIMBER PILE AND CONCRETE SILL INTERIOR BENTS AND LOCATED AT THE SITE OF THE PROPOSED STRUCTURE SHALL BE REMOVED IN IT'S ENTIRETY, EXCEPT METAL RAILS AND POSTS AND INTERIOR BENT CONCRETE FOOTINGS AS NOTED ON GENERAL DRAWING SHEET 1 OF 2. THE EXISTING BRIDGE IS PRESENTLY POSTED FOR LOAD LIMIT. FOR REMOVAL OF EXISTING STRUCTURE, SEE SPECIAL PROVISIONS.

THE SUBSTRUCTURE OF THE EXISTING BRIDGE INDICATED ON THE PLANS IS FROM THE BEST INFORMATION AVAILABLE. THIS INFORMATION IS SHOWN FOR THE CONVENIENCE OF THE CONTRACTOR. THE CONTRACTOR SHALL HAVE NO CLAIM WHATSOEVER AGAINST THE DEPARTMENT OF TRANSPORTATION FOR ANY DELAYS OR ADDITIONAL COST INCURRED BASED ON DIFFERENCES BETWEEN THE EXISTING BRIDGE SUBSTRUCTURE SHOWN ON THE PLANS AND THE ACTUAL CONDITIONS AT THE PROJECT SITE.

REMOVAL OF THE EXISTING BRIDGE SHALL BE PERFORMED IN A MANNER THAT PREVENTS DEBRIS FROM FALLING INTO THE WATER. THE CONTRACTOR SHALL SUBMIT DEMOLITION PLANS FOR REVIEW AND REMOVE THE BRIDGE IN ACCORDANCE WITH ARTICLE 402-2 OF THE STANDARD SPECIFICATIONS.

THE MATERIAL SHOWN IN THE CROSS-HATCHED AREA ON SHEET S-1 SHALL BE EXCAVATED FOR A DISTANCE OF 40 FT. EACH SIDE OF CENTERLINE ROADWAY AS DIRECTED BY THE ENGINEER. THIS WORK WILL BE PAID FOR AT THE CONTRACT LUMP SUM PRICE FOR UNCLASSIFIED STRUCTURE EXCAVATION. SEE SECTION 412 OF THE STANDARD SPECIFICATIONS.

ASPHALT WEARING SURFACE IS INCLUDED IN THE ROADWAY QUANTITY. SEE ROADWAY QUANTITIES.

THIS STRUCTURE HAS BEEN DESIGNED IN ACCORDANCE WITH "HEC 18- EVALUATING SCOUR AT BRIDGES".

FOR SUBMITTAL OF WORKING DRAWINGS, SEE SPECIAL PROVISIONS.

FOR FALSEWORK AND FORMWORK, SEE SPECIAL PROVISIONS.

FOR CRANE SAFETY, SEE SPECIAL PROVISIONS.

FOR GROUT FOR STRUCTURES, SEE SPECIAL PROVISIONS.

FOR ASBESTOS ASSESSMENT, SEE SPECIAL PROVISIONS.

FOR FOUNDATION NOTES, SEE "PILE FOUNDATION TABLES" SHEET.

TOTAL BILL OF MATERIAL

	REMOVAL OF EXISTING STRUCTURE	ASBESTOS ASSESSMENT	PILE EXCAVATION IN SOIL	PILE EXCAVATION NOT IN SOIL	UNCLASSIFIED STRUCTURE EXCAVATION	CLASS A CONCRETE	BRIDGE APPROACH SLABS	REINFORCING STEEL	PILE DRIVING EQUIPMENT SETUP FOR HP 12 X 53 STEEL PILES	HP 12 X 53 STEEL PILES		TWO BAR METAL RAIL	1'-2" X 2'-10 3/8" CONCRETE PARAPET	RIP RAP CLASS II (2'-0" THICK)	GEOTEXTILE FOR DRAINAGE	ELASTOMERIC BEARINGS	3'-0" X 3'-3" PRESTRESSED CONCRETE BOX BEAMS	
	LUMP SUM	LUMP SUM	LIN. FT.	LIN. FT.	LUMP SUM	CU. YDS.	LUMP SUM	LBS.	EACH	NO.	LIN. FT.	LIN. FT.	LIN. FT.	TON	SQ. YDS.	LUMP SUM	NO.	LIN. FT.
SUPERSTRUCTURE							LUMP SUM					194.38	210.00			LUMP SUM	11	1155.00
END BENT 1			46.1	21.0		29.7		4,699	7	7	105			216	240			
END BENT 2			67.9	21.0	LUMP SUM	29.7		4,699	7	7	125			132	146			
TOTAL	LUMP SUM	LUMP SUM	114.0	42.0	LUMP SUM	59.4	LUMP SUM	9,398	14	14	230	194.38	210.00	348	386	LUMP SUM	11	1155.00

PROJECT NO. BP8.R021
MOORE/MONTGOMERY COUNTY
STATION: 16+50.00 -L-

SHEET 2 OF 2

STATE OF NORTH CAROLINA
DEPARTMENT OF TRANSPORTATION
RALEIGH

GENERAL DRAWING

FOR BRIDGE ON SR 1124/SR 1531
OVER DROWNING CREEK
BETWEEN SR 1530 & NC 73

NORTH CAROLINA PROFESSIONAL SEAL 24939 ENGINEER BYRON E. ATKINSON
12/18/2024

DOCUMENT NOT CONSIDERED FINAL UNLESS ALL SIGNATURES COMPLETED

MI ENGINEERING
1011 SCHAUB DRIVE, SUITE 100
RALEIGH, NC 27606
(919) 851-6606
FIRM PE NUMBER : P-0671

REVISIONS						SHEET NO.
NO.	BY:	DATE:	NO.	BY:	DATE:	S-2
1			3			TOTAL SHEETS
2			4			19

DRAWN BY : B.E. LANNING DATE : 12/2024
CHECKED BY : B.E. ATKINSON DATE : 12/2024
DESIGN ENGINEER OF RECORD : B.E. ATKINSON DATE : 12/2024

12/18/2024
2:53:14 PM
User: blanning
Filename: N:\NC Bridges\M21021_CH Eng_Moore 26 Br. Repl\BP8R021\Structures\401_003_BP8R021_SMU_GD2_620026.dgn

SUMMARY OF PILE INFORMATION/INSTALLATION

(Blank entries indicate item is not applicable to structure)

End Bent/ Bent No, Pile(s) #(-#) (e.g., "Bent 1, Piles 1-5")	Factored Resistance per Pile TONS	Pile Cut-Off (Top of Pile) Elevation FT	Estimated Pile Length per Pile FT	Scour Critical Elevation FT	Driven Piles			Predrilling for Piles*			Drilled-In Piles		
					Min Pile Tip (Tip No Higher Than) Elev FT	Required Driving Resistance (RDR)** per Pile TONS	Total Pile Redrives Quantity EACH	Predrilling Length per Pile Lin FT	Predrilling Elevation (Elev Not To Predrill Below) FT	Maximum Predrilling Dia INCHES	Pile Excavation (Bottom of Hole) Elev FT	Pile Exc Not In Soil per Pile Lin FT	Pile Exc In Soil per Pile Lin FT
End Bent No.1, Pile 1	113	386.1	15								377.0 +/-	3.0	5.1
End Bent No.1, Pile 2	113	386.0	15								376.0 +/-	3.0	4.9
End Bent No.1, Pile 3	113	385.9	15								375.0 +/-	3.0	5.7
End Bent No.1, Pile 4	113	385.8	15								374.0 +/-	3.0	6.4
End Bent No.1, Pile 5	113	385.7	15								373.0 +/-	3.0	7.2
End Bent No.1, Pile 6	113	385.6	15								373.0 +/-	3.0	8.0
End Bent No.1, Pile 7	113	385.5	15								372.0 +/-	3.0	8.8
End Bent No.2, Pile 1	113	385.5	20								369.0 +/-	3.0	11.5
End Bent No.2, Pile 2	113	385.4	20								370.0 +/-	3.0	10.9
End Bent No.2, Pile 3	113	385.3	20								370.0 +/-	3.0	10.3
End Bent No.2, Pile 4	113	385.2	20								371.0 +/-	3.0	9.7
End Bent No.2, Pile 5	113	385.1	15								372.0 +/-	3.0	9.1
End Bent No.2, Pile 6	113	385.0	15								372.0 +/-	3.0	8.5
End Bent No.2, Pile 7	113	384.9	15								373.0 +/-	3.0	7.9

*Predrilling for Piles is required for end bents/bents with a predrilling length and at the Contractor's option for end bents/bents with predrilling information but no predrilling length.

$$^{**}RDR = \frac{Factored\ Resistance + Factored\ Downdrag\ Load + Factored\ Dead\ Load}{Dynamic\ Resistance\ Factor} + Nominal\ Downdrag\ Resistance + \frac{Nominal\ Scour\ Resistance}{Scour\ Resistance\ Factor}$$

PILE DESIGN INFORMATION

(Blank entries indicate item is not applicable to structure)

End Bent/ Bent No, Pile(s) #(-#) (e.g., "Bent 1, Piles 1-5")	Factored Axial Load per Pile TONS	Factored Downdrag Load per Pile TONS	Factored Dead Load* per Pile TONS	Dynamic Resistance Factor	Nominal Downdrag Resistance per Pile TONS	Nominal Scour Resistance per Pile TONS	Scour Resistance Factor (Default = 1.00)
End Bent No.1	113			0.60			1.00
End Bent No.2	113			0.60			1.00

*Factored Dead Load is factored weight of pile above the ground line.

NOTES:

1. THE PILE FOUNDATION TABLES ARE BASED ON THE BRIDGE SUBSTRUCTURE DESIGN AND FOUNDATION RECOMMENDATIONS SEALED BY A NORTH CAROLINA PROFESSIONAL ENGINEER (THOMAS J. DAILY, PE AND 045672) ON 08-28-2023.
2. TOTAL PILE DRIVING EQUIPMENT SETUP QUANTITY (NOT SHOWN IN PILE FOUNDATION TABLES) EQUALS THE NUMBER OF DRIVEN PILES, I.E., THE NUMBER OF PILES WITH A REQUIRED DRIVING RESISTANCE.
3. THE ENGINEER WILL DETERMINE THE NEED FOR PDA TESTING AND PIPE PILE PLATES WHEN PDA'S OR PLATES MAY BE REQUIRED."
4. FOR PILES, SEE PILES PROVISION AND SECTION 450 OF THE STANDARD SPECIFICATIONS.
5. FILL HOLES FOR PILE EXCAVATION AT END BENT NO. 1 AND END BENT NO.2 WITH CONCRETE OR GROUT.
6. INSTALL DRILLED-IN H-PILES AT END BENT NO. 1 AND END BENT NO. 2 WITH AT LEAST 3 FEET OF PENETRATION INTO CRYSTALLINE ROCK.

PROJECT NO. BP8.R021
MOORE/MONTGOMERY COUNTY
STATION: 16+50.00 -L-

NORTH CAROLINA PROFESSIONAL SEAL 24939 ENGINEER BYRON E. ATKINSON
12/18/2024

DOCUMENT NOT CONSIDERED FINAL UNLESS ALL SIGNATURES COMPLETED

STATE OF NORTH CAROLINA
DEPARTMENT OF TRANSPORTATION
RALEIGH

PILE FOUNDATION TABLES

MI ENGINEERING
1011 SCHAUB DRIVE, SUITE 100
RALEIGH, NC 27606
(919) 851-6606
FIRM PE NUMBER : P-0671

REVISIONS						SHEET NO.
NO.	BY:	DATE:	NO.	BY:	DATE:	S-3
1			3			TOTAL SHEETS
2			4			19

DRAWN BY : B.E. LANNING DATE : 12/2024
CHECKED BY : B.E. ATKINSON DATE : 12/2024
DESIGN ENGINEER OF RECORD : B.E. ATKINSON DATE : 12/2024

12/18/2024
2:53:16 PM
User: blanning
Filename: N:\NC Bridges\M21021_CH Eng_Moore 26 Br. Repl\BP8R021\Structures\401.005.BP8R021.SMU.FT1.620026.dgn

LOAD AND RESISTANCE FACTOR RATING (LRFD) SUMMARY FOR PRESTRESSED CONCRETE GIRDERS

LEVEL		VEHICLE	WEIGHT (W) (TONS)	CONTROLLING LOAD RATING	MINIMUM RATING FACTORS (RF)	TONS = W X RF	STRENGTH I LIMIT STATE											SERVICE III LIMIT STATE						COMMENT NUMBER
								MOMENT					SHEAR						MOMENT					
							LIVELOAD FACTORS	DISTRIBUTION FACTORS (DF)	RATING FACTOR	SPAN	GIRDER LOCATION	DISTANCE FROM LEFT END OF SPAN (ft)	DISTRIBUTION FACTORS (DF)	RATING FACTOR	SPAN	GIRDER LOCATION	DISTANCE FROM LEFT END OF SPAN (ft)	LIVELOAD FACTORS	DISTRIBUTION FACTORS (DF)	RATING FACTOR	SPAN	GIRDER LOCATION	DISTANCE FROM LEFT END OF SPAN (ft)	
DESIGN LOAD RATING		HL-93(Inv)	--	1	1.55	--	1.75	0.205	1.83	A	E	51.7	0.579	**1.55**	A	E	10.3	0.80	0.204	1.70	A	I	51.7	
		HL-93(Opr)	--	--	2.07	--	1.35	0.205	2.38	A	E	51.7	0.579	2.07	A	E	10.3	N/A	--	--	--	--	--	
		HS-20(Inv)	36.00	2	2.15	77.40	1.75	0.205	2.58	A	E	51.7	0.579	**2.15**	A	E	10.3	0.80	0.205	2.39	A	E	51.7	
		HS-20(Opr)	36.00	--	2.85	102.60	1.35	0.205	3.34	A	E	51.7	0.579	2.85	A	E	10.3	N/A	--	--	--	--	--	
LEGAL LOAD RATING	SV	SNSH	13.50	--	5.69	76.82	1.40	0.205	7.69	A	E	51.7	0.579	7.04	A	E	10.3	0.80	0.205	5.69	A	E	51.7	
		SNGARBS2	20.00	--	4.11	82.20	1.40	0.205	5.55	A	E	51.7	0.579	4.87	A	E	10.3	0.80	0.205	4.11	A	E	51.7	
		SNAGRIS2	22.00	--	3.84	84.48	1.40	0.205	5.18	A	E	51.7	0.579	4.47	A	E	10.3	0.80	0.205	3.84	A	E	51.7	
		SNCOTTS3	27.25	--	2.83	77.12	1.40	0.205	3.82	A	E	51.7	0.579	3.41	A	E	10.3	0.80	0.205	2.83	A	E	51.7	
		SNAGGRS4	34.93	--	2.31	80.68	1.40	0.205	3.12	A	E	51.7	0.579	2.74	A	E	10.3	0.80	0.205	2.31	A	E	51.7	
		SNS5A	35.55	--	2.26	80.34	1.40	0.205	3.06	A	E	51.7	0.579	2.75	A	E	10.3	0.80	0.205	2.26	A	E	51.7	
		SNS6A	39.95	--	2.06	82.30	1.40	0.205	2.78	A	E	51.7	0.579	2.47	A	E	10.3	0.80	0.205	2.06	A	E	51.7	
		SNS7B	42.00	--	1.96	82.32	1.40	0.205	2.64	A	E	51.7	0.579	2.39	A	E	10.3	0.80	0.205	1.96	A	E	51.7	
	TTST	TNAGRIT3	33.00	--	2.50	82.50	1.40	0.205	3.38	A	E	51.7	0.579	2.99	A	E	10.3	0.80	0.205	2.50	A	E	51.7	
		TNT4A	33.08	--	2.51	83.02	1.40	0.205	3.39	A	E	51.7	0.579	2.93	A	E	10.3	0.80	0.205	2.51	A	E	51.7	
		TNT6A	41.60	--	2.03	84.45	1.40	0.205	2.74	A	E	51.7	0.579	2.51	A	E	10.3	0.80	0.205	2.03	A	E	51.7	
		TNT7A	42.00	--	2.03	85.26	1.40	0.205	2.74	A	E	51.7	0.579	2.47	A	E	10.3	0.80	0.205	2.03	A	E	51.7	
		TNT7B	42.00	--	2.07	86.94	1.40	0.205	2.80	A	E	51.7	0.579	2.35	A	E	10.3	0.80	0.205	2.07	A	E	51.7	
		TNAGRIT4	43.00	--	1.99	85.57	1.40	0.205	2.69	A	E	51.7	0.579	2.28	A	E	10.3	0.80	0.205	1.99	A	E	51.7	
		TNAGT5A	45.00	--	1.89	85.05	1.40	0.205	2.55	A	E	51.7	0.579	2.23	A	E	10.3	0.80	0.205	1.89	A	E	51.7	
		TNAGT5B	45.00	3	1.87	84.15	1.40	0.205	2.53	A	E	51.7	0.579	2.16	A	E	10.3	0.80	0.205	**1.87**	A	E	51.7	
EMERGENCY VEHICLE (EV)		EV2	28.75	--	2.89	83.09	1.30	0.205	4.20	A	E	51.7	0.579	3.62	A	E	10.3	0.80	0.205	2.89	A	E	51.7	
		EV3	43.00	4	1.90	81.70	1.30	0.205	2.77	A	E	51.7	0.579	2.37	A	E	10.3	0.80	0.205	**1.90**	A	E	51.7	

LOAD FACTORS:

DESIGN LOAD RATING FACTORS	LIMIT STATE	γ_{DC}	γ_{DW}
	STRENGTH I	1.25	1.50
	SERVICE III	1.00	1.00

NOTES:

MINIMUM RATING FACTORS ARE BASED ON THE STRENGTH I AND SERVICE III LIMIT STATES.

ALLOWABLE STRESSES FOR SERVICE III LIMIT STATE ARE AS REQUIRED FOR DESIGN.

COMMENTS:

1.
2.
3.
4.

CONTROLLING LOAD RATING

1 DESIGN LOAD RATING (HL-93)
2 DESIGN LOAD RATING (HS-20)
3 LEGAL LOAD RATING **
4 EMERGENCY VEHICLE LOAD RATING **
** SEE CHART FOR VEHICLE TYPE

GIRDER LOCATION

I - INTERIOR GIRDER
EL - EXTERIOR LEFT GIRDER
ER - EXTERIOR RIGHT GIRDER

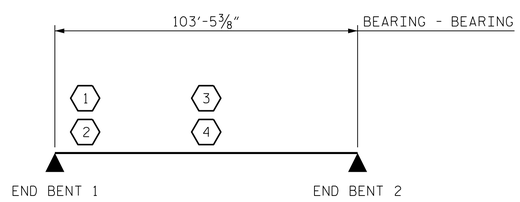

LRFR SUMMARY

PROJECT NO. BP8.R021
MOORE/MONTGOMERY COUNTY
STATION: 16+50.00 -L-

STATE OF NORTH CAROLINA
DEPARTMENT OF TRANSPORTATION
RALEIGH

LRFR SUMMARY FOR
105' BOX BEAM UNIT
105° SKEW
SPAN A
(NON-INTERSTATE TRAFFIC)

NORTH CAROLINA PROFESSIONAL SEAL 24939 ENGINEER BYRON E. ATKINSON
12/18/2024

DOCUMENT NOT CONSIDERED FINAL UNLESS ALL SIGNATURES COMPLETED

MI ENGINEERING
1011 SCHAUB DRIVE, SUITE 100
RALEIGH, NC 27606
(919) 851-6606
FIRM PE NUMBER : P-0671

REVISIONS						SHEET NO.
NO.	BY:	DATE:	NO.	BY:	DATE:	S-4
1			3			TOTAL SHEETS
2			4			19

DRAWN BY : B.E. LANNING DATE : 12/2024
CHECKED BY : B.E. ATKINSON DATE : 12/2024
DESIGN ENGINEER OF RECORD : B.E. ATKINSON DATE : 12/2024

12/18/2024
2:53:20 PM
User: blanning
Filename: N:\NC Bridges\M21021.CH Eng.Moore 26 Br.Repl\BP8R021\Structures\401_007_BP8R021_SMU_LRFR1_620026.dgn

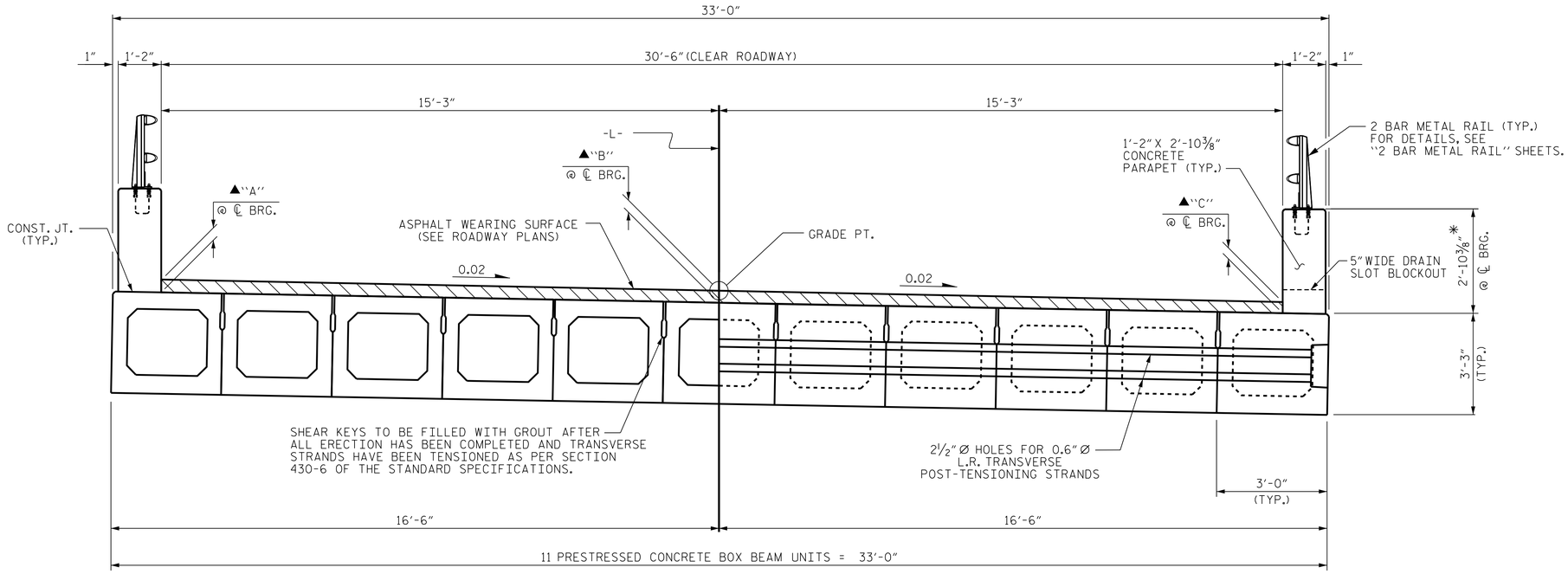

HALF SECTION
THROUGH VOIDS

HALF SECTION
AT INTERMEDIATE DIAPHRAGMS

TYPICAL SECTION

* THE MAXIMUM CONCRETE PARAPET HEIGHT AND ASPHALT THICKNESS IS SHOWN. THE HEIGHT OF THE CONCRETE PARAPET AND ASPHALT THICKNESS VARIES WHILE THE TOP OF THE CONCRETE PARAPET FOLLOWS THE PROFILE OF THE GUTTERLINE. FOR CONCRETE PARAPET HEIGHT DETAILS AND ASPHALT THICKNESS AT MID-SPAN, SEE SHEET 4 OF 4.

▲ SEE "ASPHALT WEARING SURFACE THICKNESS" DETAIL.

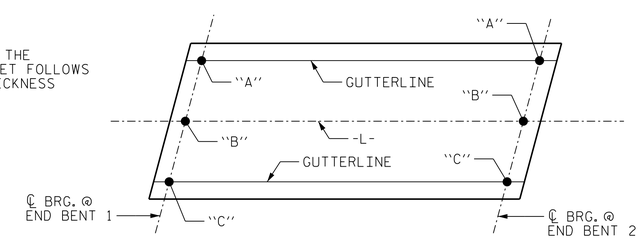

ASPHALT WEARING SURFACE THICKNESS

NOTE: AWS THICKNESS INCLUDES IMPACT OF SAG VERTICAL CURVE AND BRIDGE SKEW.

	END BENT 1	END BENT 2
DIM. "A"	3½"	3½"
DIM. "B"	3⅞"	3½"
DIM. "C"	4 5/16"	3½"

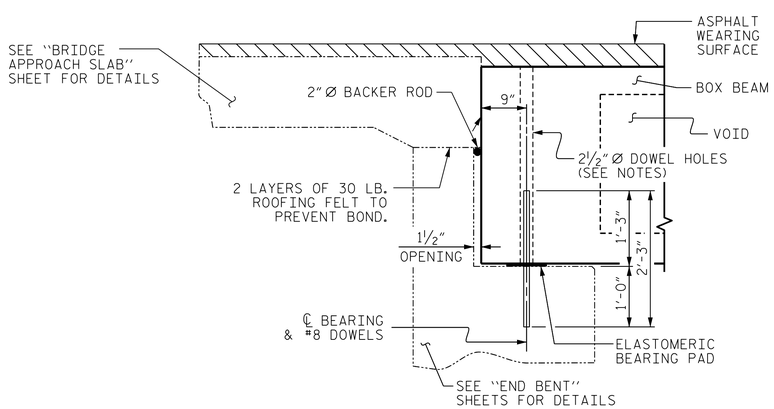

SECTION AT END BENT

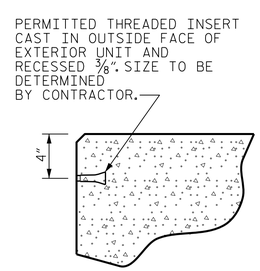

THREADED INSERT DETAIL

NOTES

ALL PRESTRESSING STRANDS SHALL BE 7-WIRE LOW RELAXATION GRADE 270 STRANDS AND SHALL CONFORM TO AASHTO M203 EXCEPT FOR SAMPLING REQUIREMENTS WHICH SHALL BE IN ACCORDANCE WITH THE STANDARD SPECIFICATIONS.

ALL REINFORCING STEEL CAST WITH THE BOX BEAM SECTIONS SHALL BE GRADE 60 AND SHALL BE INCLUDED IN THE UNIT PRICE BID FOR PRESTRESSED CONCRETE BOX BEAMS.

FLAME CUTTING OF THE TRANSVERSE POST-TENSIONING STRAND IS NOT ALLOWED.

RECESSES FOR TRANSVERSE STRANDS SHALL BE GROUTED AFTER THE TENSIONING OF THE STRANDS.

THE 2½" Ø DOWEL HOLES AT FIXED ENDS OF BOX BEAM SECTIONS SHALL BE FILLED WITH NON-SHRINK GROUT.

THE BACKER RODS SHALL CONFORM TO THE REQUIREMENTS OF TYPE M BOND BREAKER. SEE SECTION 1028 OF THE STANDARD SPECIFICATIONS.

THE TRANSFER OF LOAD FROM THE ANCHORAGES TO THE BOX BEAM UNIT SHALL BE DONE WHEN THE CONCRETE HAS REACHED A COMPRESSIVE STRENGTH OF NOT LESS THAN 5,500 PSI.

ALL REINFORCING STEEL IN THE CONCRETE PARAPETS SHALL BE EPOXY COATED.

PRESTRESSING STRANDS SHALL BE CUT FLUSH WITH THE BOX BEAM UNIT ENDS.

APPLY EPOXY PROTECTIVE COATING TO BOX BEAM UNIT ENDS.

VERTICAL GROOVED CONTRACTION JOINTS, ½" IN DEPTH, SHALL BE TOOLED IN ALL EXPOSED FACES OF THE CONCRETE PARAPET AND IN ACCORDANCE WITH ARTICLE 825-10(B) OF THE STANDARD SPECIFICATIONS. A VERTICAL CONTRACTION JOINT SHALL BE LOCATED AT EACH THIRD POINT BETWEEN CONCRETE PARAPET EXPANSION JOINTS. ONLY ONE CONTRACTION JOINT IS REQUIRED AT MIDPOINT OF THE CONCRETE PARAPET SEGMENTS LESS THAN 20 FEET IN LENGTH AND NO CONTRACTION JOINTS ARE REQUIRED FOR THOSE SEGMENTS LESS THAN 10 FEET IN LENGTH.

THE LOCATION OF THE VOID DRAINS MAY BE SHIFTED SLIGHTLY WHERE NECESSARY TO CLEAR PRESTRESSING STRANDS OR TRANSVERSE REINFORCING STEEL.

FOR GROUT FOR STRUCTURES, SEE SPECIAL PROVISIONS.

THE PERMITTED THREADED INSERTS ARE DETAILED AS AN OPTION FOR THE CONTRACTOR TO ATTACH FALSEWORK AND FORMWORK DURING CONSTRUCTION.

THE PERMITTED THREADED INSERTS IN THE EXTERIOR UNITS SHALL BE SIZED BY THE CONTRACTOR, SPACED AT 4'-0" CENTERS AND GALVANIZED IN ACCORDANCE WITH SECTION 1076 OF THE STANDARD SPECIFICATIONS. STAINLESS STEEL THREADED INSERTS MAY BE USED AS AN ALTERNATE.

THE PERMITTED THREADED INSERTS SHALL BE GROUTED BY THE CONTRACTOR IMMEDIATELY FOLLOWING REMOVAL OF THE FALSEWORK.

THE COST OF THE PERMITTED THREADED INSERTS SHALL BE INCLUDED IN THE PRICE BID FOR THE PRECAST UNITS.

THE DRAIN OPENING AT THE GUTTERLINE SHALL BE 4" X 5". THE HEIGHT OF THE BLOCKOUT IN THE CONCRETE PARAPET SHALL EXTEND FROM THE TOP OF THE BOX BEAM UNIT TO THE TOP OF THE DRAIN OPENING.

APPLY EPOXY PROTECTIVE COATING TO EXTERIOR FACE OF THE EXTERIOR BOX BEAM UNITS THAT REQUIRE DRAINS IN THE CONCRETE PARAPET.

PROJECT NO. BP8.R021
MOORE/MONTGOMERY COUNTY
STATION: 16+50.00 -L-

SHEET 1 OF 4

STATE OF NORTH CAROLINA
DEPARTMENT OF TRANSPORTATION
RALEIGH

3'-0" X 3'-3" PRESTRESSED CONCRETE BOX BEAM UNIT

NORTH CAROLINA PROFESSIONAL SEAL 24939 ENGINEER BYRON E. ATKINSON
12/18/2024

DOCUMENT NOT CONSIDERED FINAL UNLESS ALL SIGNATURES COMPLETED

MI ENGINEERING
1011 SCHAUB DRIVE, SUITE 100
RALEIGH, NC 27606
(919) 851-6606
FIRM PE NUMBER : P-0671

REVISIONS							SHEET NO.
NO.	BY:	DATE:	NO.	BY:	DATE:		S-5
1			3				TOTAL SHEETS
2			4				19

DRAWN BY :	B.E. LANNING	DATE :	12/2024
CHECKED BY :	B.E. ATKINSON	DATE :	12/2024
DESIGN ENGINEER OF RECORD :	B.E. ATKINSON	DATE :	12/2024

12/18/2024
2:53:22 PM
User: blanning
Filename: N:\NC Bridges\M21021_CH Eng_Moore 26 Br. Rep\BP8R021\Structures\401_009_BP8R021_SMU_BBU1_620026.dgn

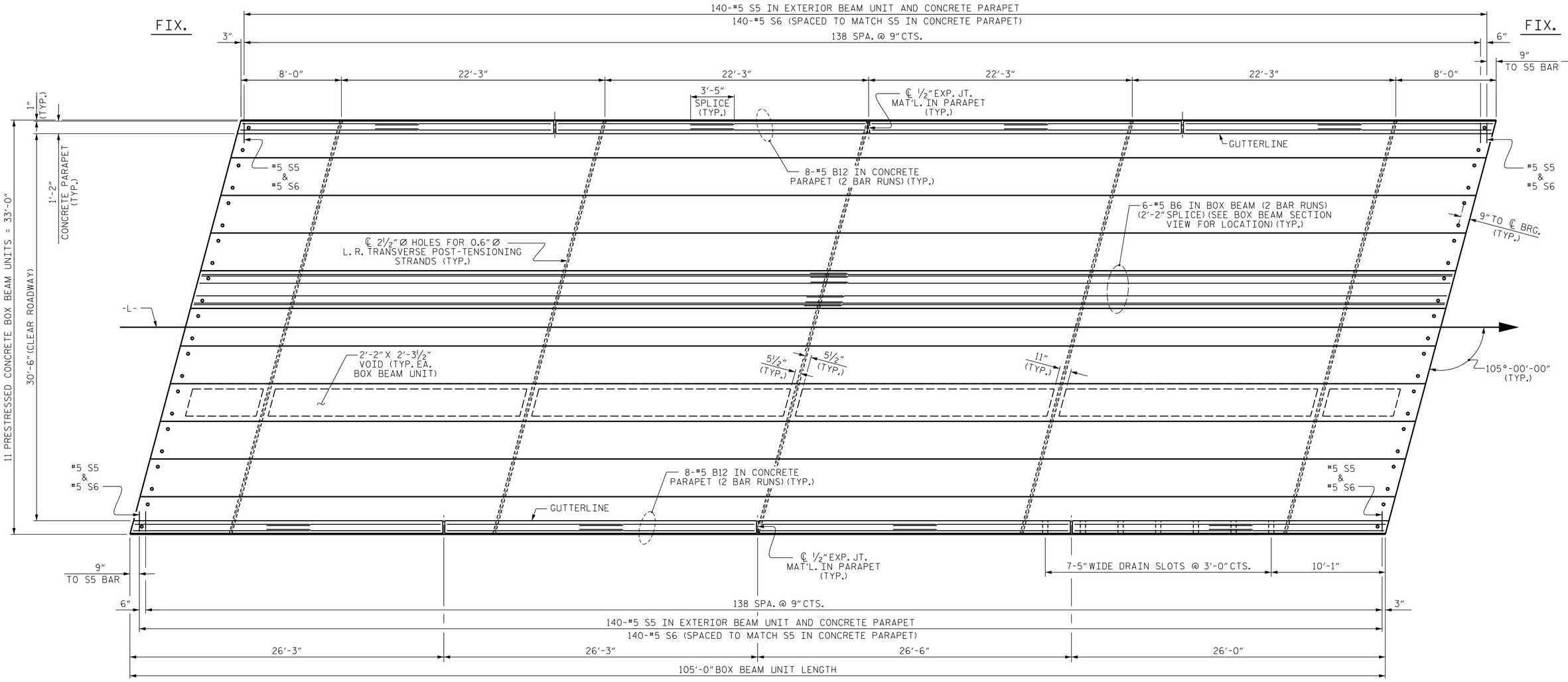

PLAN OF UNIT

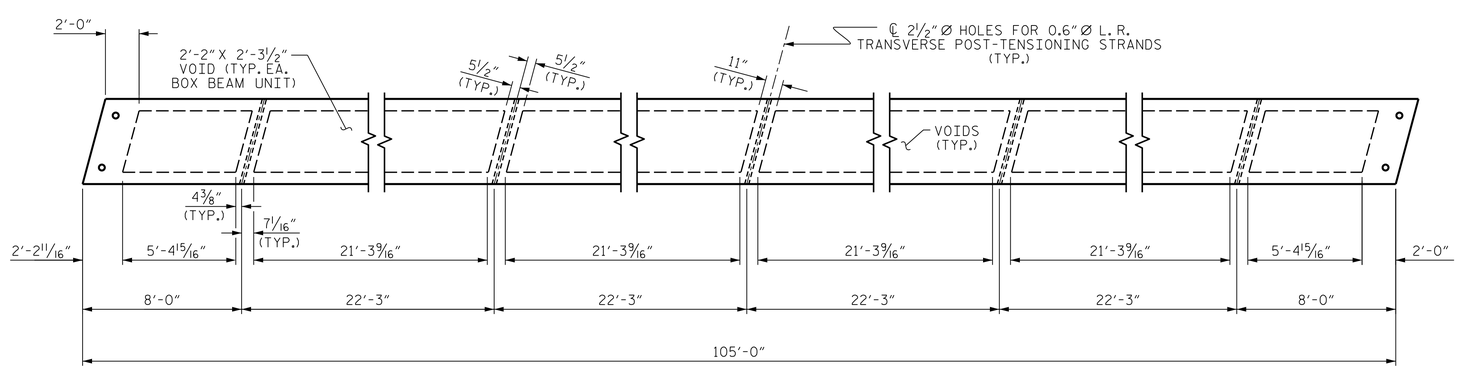

DIAPHRAGM AND VOID LAYOUT

PROJECT NO. BP8.R021
MOORE/MONTGOMERY COUNTY
STATION: 16+50.00 -L-

SHEET 2 OF 4

STATE OF NORTH CAROLINA
DEPARTMENT OF TRANSPORTATION
RALEIGH

PLAN OF 105' UNIT 30'-10" CLEAR ROADWAY 105° SKEW

NORTH CAROLINA PROFESSIONAL SEAL 24939 ENGINEER BYRON E. ATKINSON
12/18/2024

DOCUMENT NOT CONSIDERED FINAL UNLESS ALL SIGNATURES COMPLETED

MI ENGINEERING
1011 SCHAUB DRIVE, SUITE 100
RALEIGH, NC 27606
(919) 851-6606
FIRM PE NUMBER : P-0671

REVISIONS						SHEET NO.
NO.	BY:	DATE:	NO.	BY:	DATE:	S-6
1			3			TOTAL SHEETS
2			4			19

DRAWN BY : B.E. LANNING DATE : 12/2024
CHECKED BY : B.E. ATKINSON DATE : 12/2024
DESIGN ENGINEER OF RECORD : B.E. ATKINSON DATE : 12/2024

12/18/2024
2:53:23 PM
User: blanning
Filename: N:\NC Bridges\M21021_CH Eng_Moore 26 Br_Rep\BP8R021\Structures\401_011_BP8R021_SMU_BBU2_620026.dgn

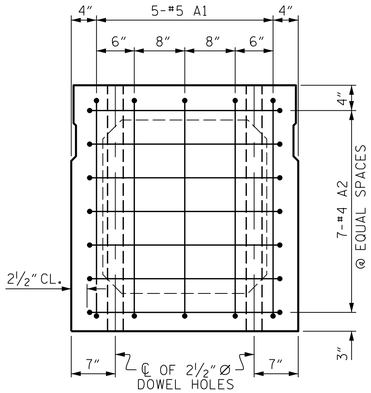

END ELEVATION

SHOWING PLACEMENT OF #5 & #4 "A" BARS AND LOCATION OF DOWEL HOLES. (INTERIOR BOX BEAM SECTION SHOWN-EXTERIOR SECTION SIMILAR EXCEPT SHEAR KEY LOCATION. STRAND LAYOUT NOT SHOWN.)

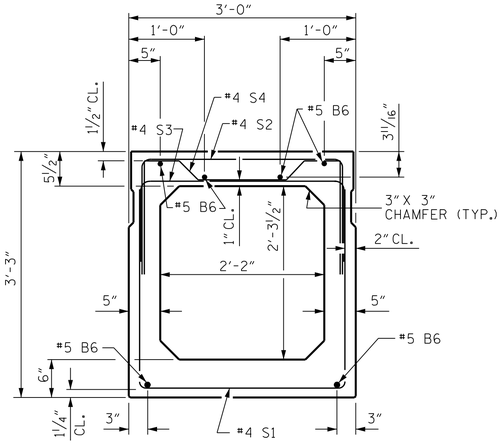

INTERIOR BOX BEAM SECTION

(STRAND LAYOUT NOT SHOWN)

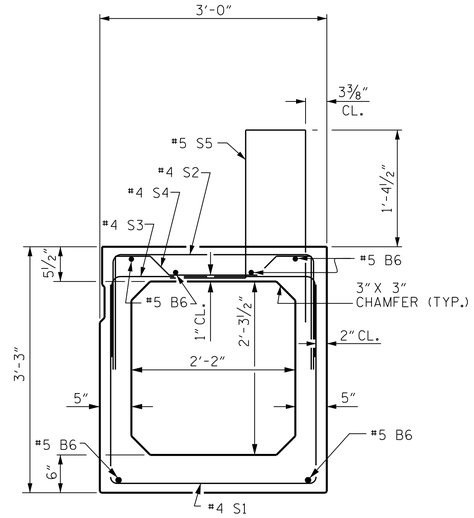

EXTERIOR BOX BEAM SECTION

(STRAND LAYOUT NOT SHOWN)

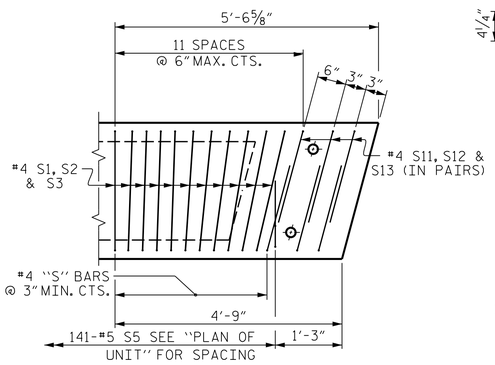

DETAIL "B"

EXTERIOR UNIT SHOWN, INTERIOR UNIT SIMILAR EXCEPT OMIT #5 S5 BARS. "B" BARS AND "A" BARS NOT SHOWN.

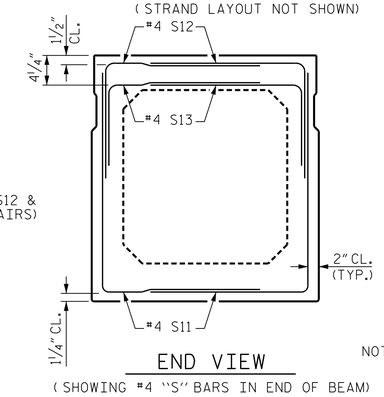

END VIEW

(SHOWING #4 "S" BARS IN END OF BEAM)

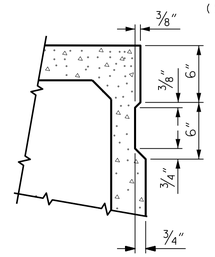

SHEAR KEY DETAIL

NOTE: OMIT SHEAR KEY ON OUTSIDE FACE OF EXTERIOR BOX BEAMS.

GRADE 270 STRANDS	
	0.6" Ø L.R.
AREA (SQUARE INCHES)	0.217
ULTIMATE STRENGTH (LBS. PER STRAND)	58,600
APPLIED PRESTRESS (LBS. PER STRAND)	43,950

0.6" Ø LOW RELAXATION STRAND LAYOUT

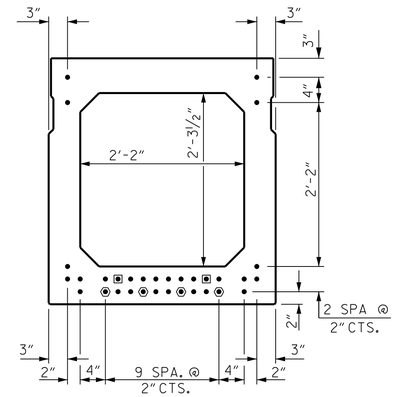

TYPICAL STRAND LOCATION

(32 STRANDS REQUIRED)

DEBONDING LEGEND

- ● FULLY BONDED STRANDS
- ◉ STRANDS DEBONDED FOR 4'-0" FROM END OF GIRDER
- ⬢ STRANDS DEBONDED FOR 12'-0" FROM END OF GIRDER

BOND SHALL BE BROKEN ON STRANDS AS SHOWN FOR THE SPECIFIED LENGTH FROM EACH END OF THE BOX BEAM. SEE STANDARD SPECIFICATIONS ARTICLE 1078-7.

BAR TYPES

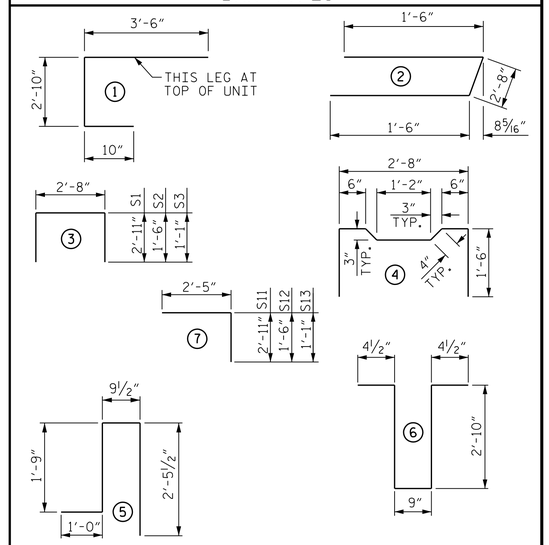

ALL BAR DIMENSIONS ARE OUT TO OUT.

BILL OF MATERIAL FOR ONE BOX BEAM SECTION

				EXTERIOR UNIT		INTERIOR UNIT	
BAR	NUMBER	SIZE	TYPE	LENGTH	WEIGHT	LENGTH	WEIGHT
A1	10	#5	1	7'-2"	75	7'-2"	75
A2	44	#4	2	5'-8"	167	5'-8"	167
B6	12	#5	STR	53'-5"	669	53'-5"	669
K1	15	#4	6	7'-2"	72	7'-2"	72
K2	10	#4	STR	2'-7"	17	2'-7"	17
S1	85	#4	3	8'-6"	483	8'-6"	483
S2	85	#4	3	5'-8"	322	5'-8"	322
S3	147	#4	3	4'-10"	475	4'-10"	475
S4	62	#4	4	5'-10"	242	5'-10"	242
S11	12	#4	7	5'-4"	43	5'-4"	43
S12	12	#4	7	3'-11"	31	3'-11"	31
S13	12	#4	7	3'-6"	28	3'-6"	28
✳ S5	140	#5	5	6'-0"	876	--	--
REINFORCING STEEL				2624	LBS.	2624	LBS.
✳ EPOXY COATED REINF. STEEL				876	LBS.		
7500 P.S.I. CONCRETE				20.5	CU. YDS.	20.3	CU. YDS.
0.6" Ø L.R. STRANDS				No. 32		No. 32	

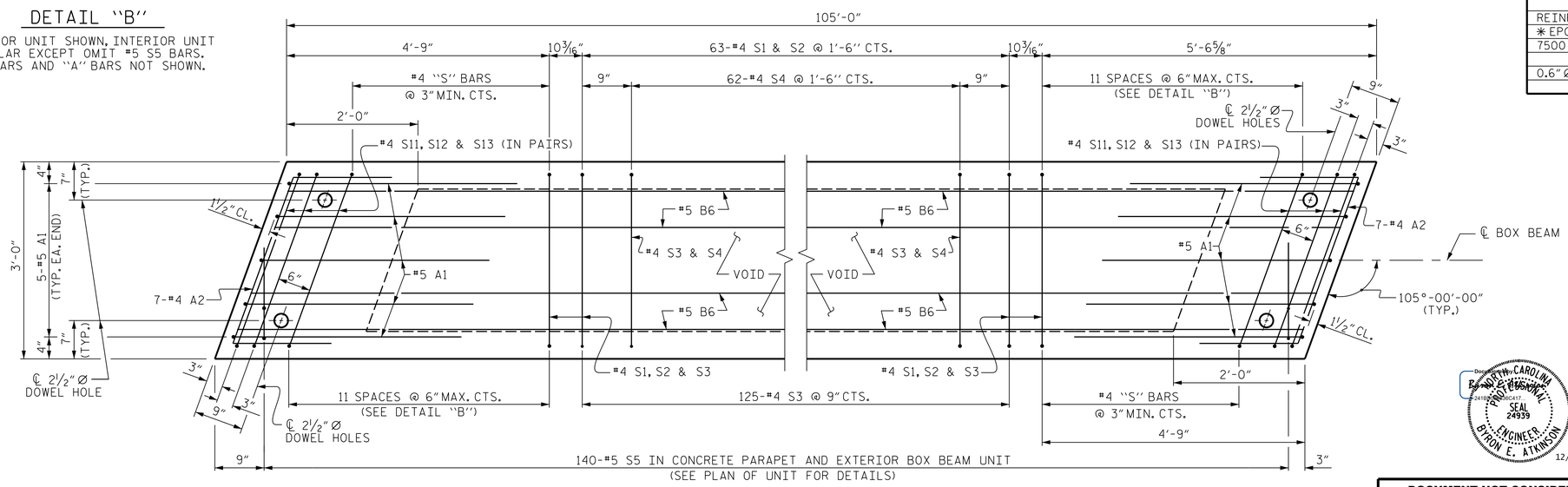

PLAN OF BOX BEAM

EXTERIOR UNIT SHOWN, INTERIOR UNIT SIMILAR EXCEPT OMIT #5 S5 BARS.
FOR LOCATION OF DIAPHRAGMS, SEE "PLAN OF UNIT".
FOR THREADED INSERTS, SEE "THREADED INSERT DETAIL".
FOR REINFORCING STEEL IN DIAPHRAGMS, SEE "DOUBLE DIAPHRAGM DETAILS".

PROJECT NO. BP8.R021
MOORE/MONTGOMERY COUNTY
STATION: 16+50.00 -L-

SHEET 3 OF 4

STATE OF NORTH CAROLINA
DEPARTMENT OF TRANSPORTATION
RALEIGH

3'-0" X 3'-3" PRESTRESSED CONCRETE BOX BEAM UNIT

NORTH CAROLINA PROFESSIONAL SEAL 24939 ENGINEER BYRON E. ATKINSON
12/18/2024

DOCUMENT NOT CONSIDERED FINAL UNLESS ALL SIGNATURES COMPLETED

MI ENGINEERING
1011 SCHAUB DRIVE, SUITE 100
RALEIGH, NC 27606
(919) 851-6606
FIRM PE NUMBER : P-0671

REVISIONS							SHEET NO.
NO.	BY:	DATE:	NO.	BY:	DATE:		S-7
1			3				TOTAL SHEETS
2			4				19

DRAWN BY :	B.E. LANNING	DATE :	12/2024
CHECKED BY :	B.E. ATKINSON	DATE :	12/2024
DESIGN ENGINEER OF RECORD :	B.E. ATKINSON	DATE :	12/2024

12/18/2024
2:53:24 PM
User: blanning
Filename: N:\NC Bridges\M21021_CH Eng_Moore 26 Br. Repl\BP8R021\Structures\401_013_BP8R021_SMU_BBU3_620026.dgn

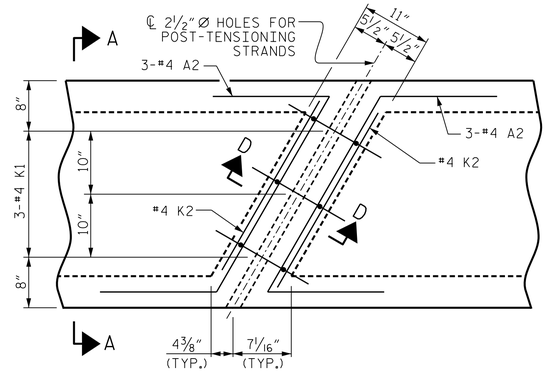

PLAN

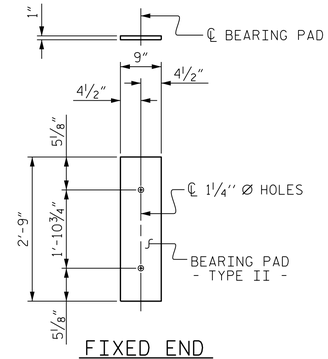

FIXED END

(TYPE II - 22 REQ'D.)

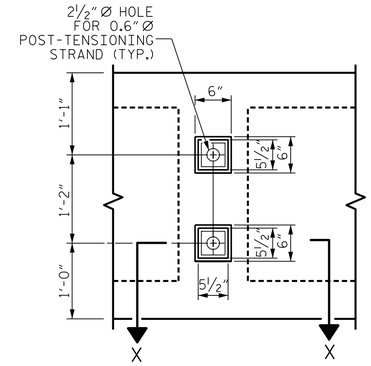

VIEW Y-Y

SHOWING ELEVATION VIEW OF GROUTED RECESS

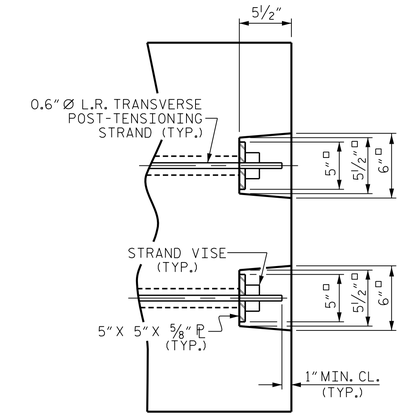

DETAIL "C"

ELASTOMERIC BEARING DETAILS

ELASTOMER IN ALL BEARINGS SHALL BE 60 DUROMETER HARDNESS.

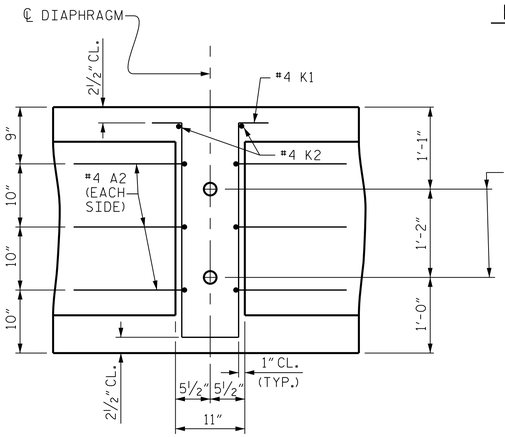

SECTION D-D

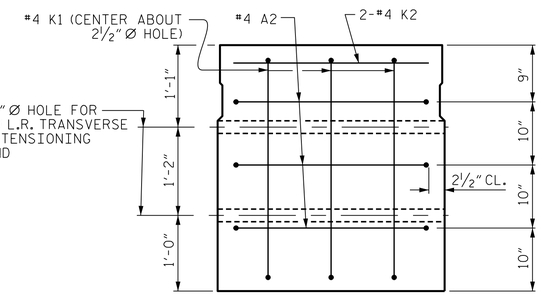

SECTION A-A

VOIDS NOT SHOWN

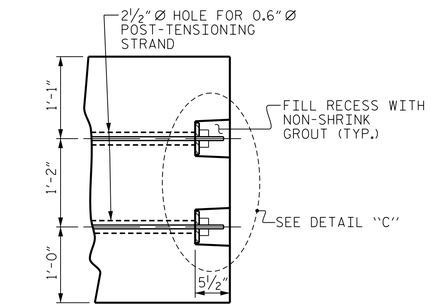

PART SECTION AT RECESS

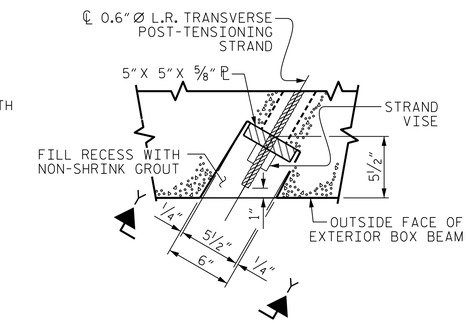

SECTION X-X

SHOWING PLAN VIEW OF GROUTED RECESS

GROUTED RECESS DETAIL AT END OF POST-TENSIONED STRANDS OF EXTERIOR BOX BEAM

DOUBLE DIAPHRAGM DETAILS

#4 "S" BARS NOT SHOWN. #4 "S" BARS MAY BE SHIFTED SLIGHTLY TO CLEAR 2½" Ø HOLE.

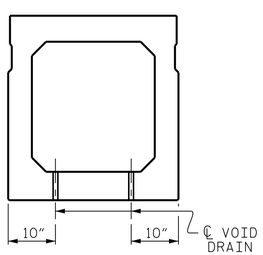

SECTION B-B

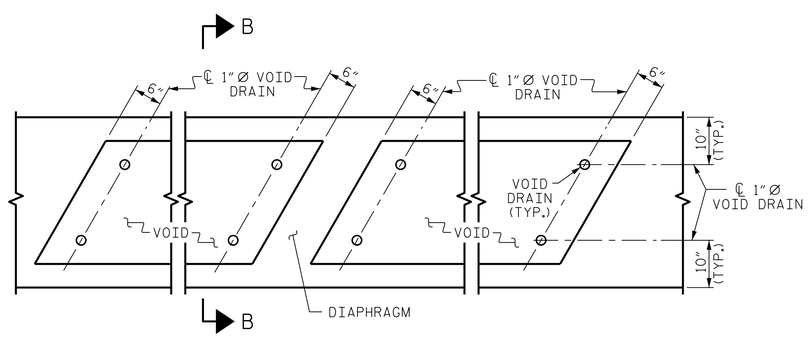

PART PLAN

VOID DRAIN DETAILS

(DIMENSIONS SHOWN ARE TYPICAL FOR EACH VOID)

GUTTERLINE ASPHALT THICKNESS & PARAPET HEIGHT		
	ASPHALT OVERLAY THICKNESS @ MID-SPAN	PARAPET HEIGHT @ MID-SPAN
105' UNITS	✱ 2⁷⁄₁₆"	2'-9⅞"

✱ INCLUDES IMPACT OF SAG VERTICAL CURVE AND BRIDGE SKEW ALONG GRADE LINE -L-.

DEAD LOAD DEFLECTION AND CAMBER	
	3'-0" x 3'-3"
105' BOX BEAM UNIT	0.6" Ø L.R. STRAND
CAMBER (SLAB ALONE IN PLACE)	1¾" ↑
DEFLECTION DUE TO SUPERIMPOSED DEAD LOAD ✱✱	1¼" ↓
FINAL CAMBER	½" ↑

✱✱ INCLUDES FUTURE WEARING SURFACE

BOX BEAM UNITS REQUIRED			
	NUMBER	LENGTH	TOTAL LENGTH
EXTERIOR B.B.	2	105'-0"	210'-0"
INTERIOR B.B.	9	105'-0"	945'-0"
TOTAL	11	———	1155'-0"

PROJECT NO. BP8.R021

MOORE/MONTGOMERY COUNTY

STATION: 16+50.00 -L-

SHEET 4 OF 4

STATE OF NORTH CAROLINA
DEPARTMENT OF TRANSPORTATION
RALEIGH

3'-0" X 3'-3"
PRESTRESSED CONCRETE
BOX BEAM UNIT

NORTH CAROLINA PROFESSIONAL SEAL 24939 ENGINEER BYRON E. ATKINSON
12/18/2024

DOCUMENT NOT CONSIDERED FINAL UNLESS ALL SIGNATURES COMPLETED

MI ENGINEERING
1011 SCHAUB DRIVE, SUITE 100
RALEIGH, NC 27606
(919) 851-6606
FIRM PE NUMBER : P-0671

REVISIONS							SHEET NO.
NO.	BY:	DATE:	NO.	BY:	DATE:		S-8
1			3				TOTAL SHEETS
2			4				19

DRAWN BY :	B.E. LANNING	DATE :	12/2024
CHECKED BY :	B.E. ATKINSON	DATE :	12/2024
DESIGN ENGINEER OF RECORD :	B.E. ATKINSON	DATE :	12/2024

12/18/2024
2:53:26 PM
User: blanning
Filename: N:\NC Bridges\W21021_CH Eng_Moore 26 Br. Repl\BP8R021\Structures\401_015_BP8R021_SMU_BBU4_620026.dgn

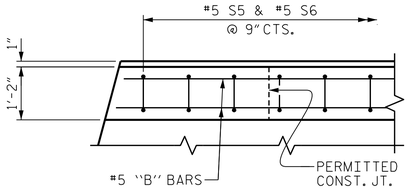

PLAN OF PARAPET

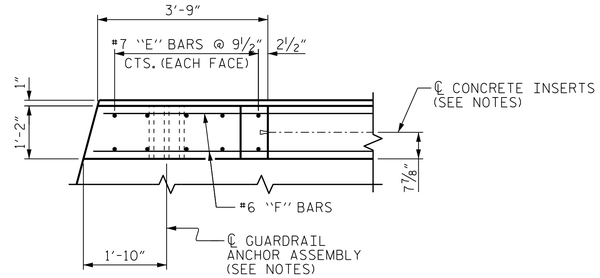

PLAN OF END POST

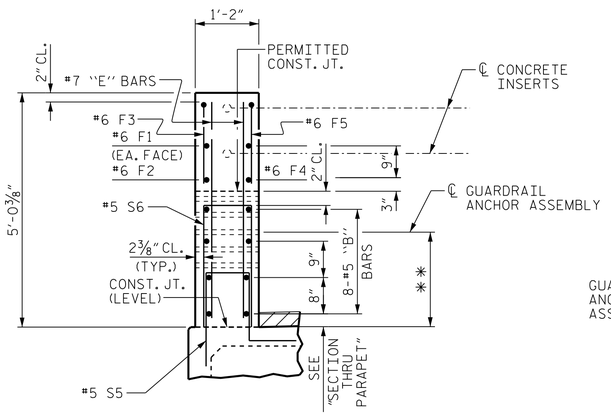

** 2'-0½" AT EACH CORNER EXCEPT
2'-1⅜" AT END BENT 1 RIGHT SIDE

END VIEW

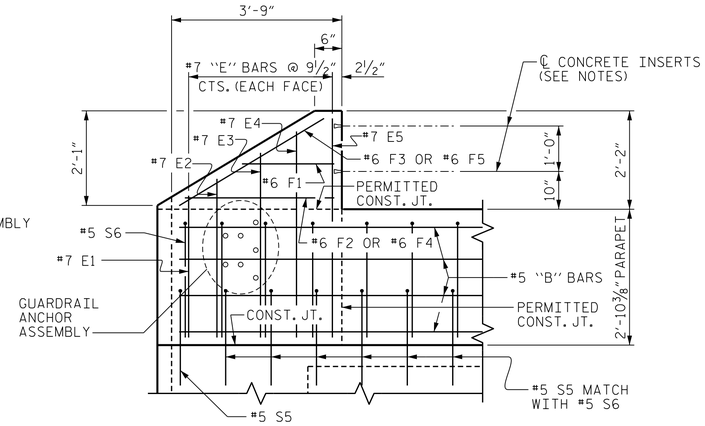

ELEVATION

PARAPET AND END POST FOR TWO BAR RAIL

END BENT 1 SHOWN, END BENT 2 SIMILAR

NOTES

ALL REINFORCING STEEL IN PARAPET AND END POSTS SHALL BE EPOXY COATED.

FOR DETAILS OF CONCRETE INSERTS IN END POSTS, SEE "RAIL POST SPACINGS AND END OF RAIL DETAILS" SHEET.

#5 S5 BARS ARE INCLUDED IN THE BILL OF MATERIAL FOR CORED SLAB UNITS.

GROOVED CONTRACTION JOINTS, ½" IN DEPTH, SHALL BE TOOLED IN ALL EXPOSED FACES OF THE PARAPET IN ACCORDANCE WITH ARTICLE 825-10(B) OF THE STANDARD SPECIFICATIONS. THE CONTRACTION JOINTS SHALL BE LOCATED AT A SPACING OF 8 FEET TO 10 FEET BETWEEN EXPANSION JOINTS. NO CONTRACTION JOINTS WILL BE REQUIRED FOR SEGMENTS LESS THAN 10 FEET IN LENGTH.

FOR DETAILS AND LOCATION OF GUARDRAIL ANCHOR ASSEMBLIES, SEE "GUARDRAIL ANCHORAGE DETAILS FOR METAL RAILS" SHEETS.

THE REINFORCING STEEL AND CONCRETE IN THE END POSTS IS INCLUDED IN THE UNIT PRICE BID FOR THE CONCRETE PARAPET.

BILL OF MATERIAL
PARAPET AND END POSTS

BAR	NO.	SIZE	TYPE	LENGTH	WEIGHT
* B12	128	#5	STR	14'-9"	1969
* E1	8	#7	STR	2'-10"	46
* E2	8	#7	STR	3'-4"	55
* E3	8	#7	STR	3'-10"	63
* E4	8	#7	STR	4'-4"	71
* E5	8	#7	STR	4'-8"	76
* F1	8	#6	STR	2'-0"	24
* F2	4	#6	STR	3'-3"	20
* F3	4	#6	STR	3'-7"	22
* F4	4	#6	STR	3'-5"	21
* F5	4	#6	STR	3'-11"	24
* S6	280	#5	1	5'-8"	1655

* EPOXY COATED REINFORCING STEEL	4,046	LBS.
CLASS AA CONCRETE	26.9	C. Y.
1'-2" x 2'-10⅜" CONCRETE PARAPET	210.00	LIN. FT.

BAR TYPE

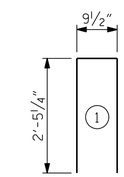

ALL BAR DIMENSIONS ARE OUT TO OUT.

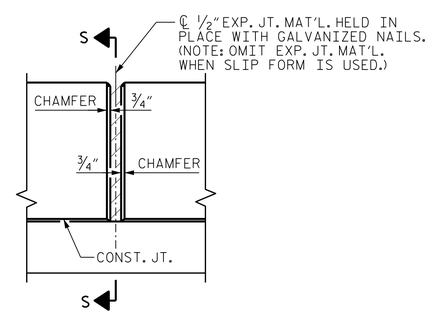

ELEVATION AT EXPANSION JOINTS

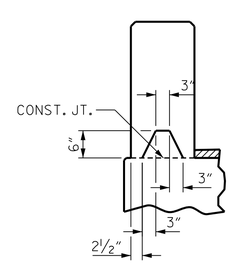

SECTION S-S

AT DAM IN OPEN JOINT
(THIS IS TO BE USED ONLY
WHEN SLIP FORM IS USED.)

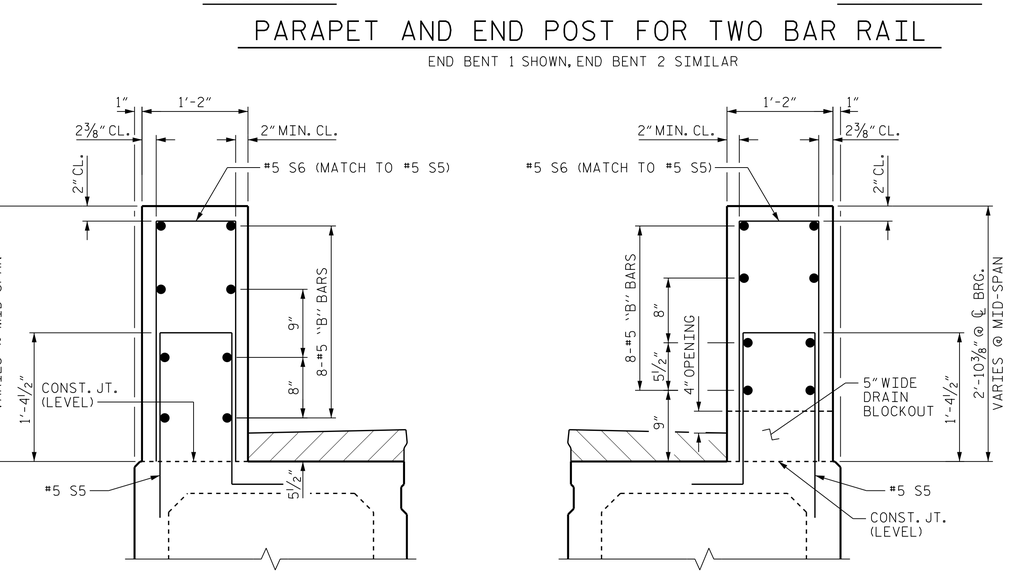

PARAPET WITHOUT DRAIN

PARAPET WITH DRAIN

SECTION THRU PARAPET

PROJECT NO. BP8.R021
MOORE/MONTGOMERY COUNTY
STATION: 16+50.00 -L-

STATE OF NORTH CAROLINA
DEPARTMENT OF TRANSPORTATION
RALEIGH

SUPERSTRUCTURE

END POSTS & PARAPET DETAILS

NORTH CAROLINA PROFESSIONAL SEAL 24939 ENGINEER BYRON E. ATKINSON
12/18/2024

DOCUMENT NOT CONSIDERED FINAL
UNLESS ALL SIGNATURES COMPLETED

MI ENGINEERING
1011 SCHAUB DRIVE, SUITE 100
RALEIGH, NC 27606
(919) 851-6606
FIRM PE NUMBER : P-0671

REVISIONS								SHEET NO.
NO.	BY:	DATE:	NO.	BY:	DATE:			S-9
1			3					TOTAL SHEETS
2			4					19

DRAWN BY :	J.I. BREWER	DATE :	12/2024
CHECKED BY :	B.E. ATKINSON	DATE :	12/2024
DESIGN ENGINEER OF RECORD :	B.E. ATKINSON	DATE :	12/2024

12/18/2024
2:53:27 PM
User: blanning
Filename: N:\NC

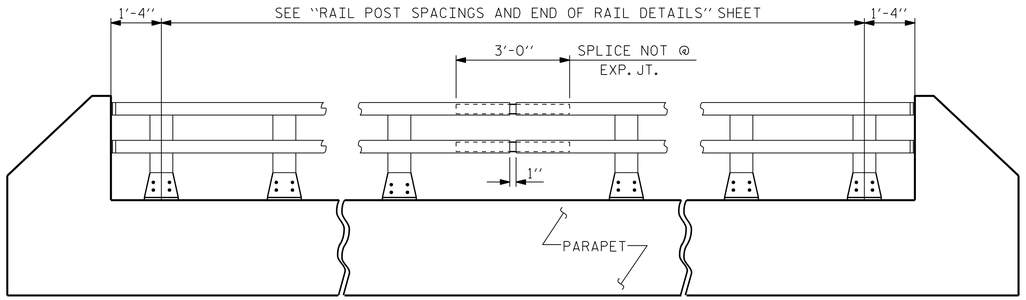

ELEVATION

NOTE : FOR ATTACHMENT OF METAL RAIL TO END POST, SEE STANDARD NO. BMR2.

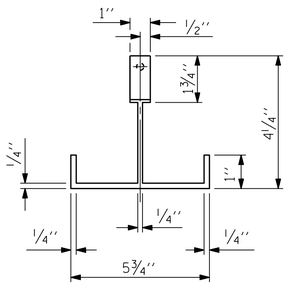

PLAN

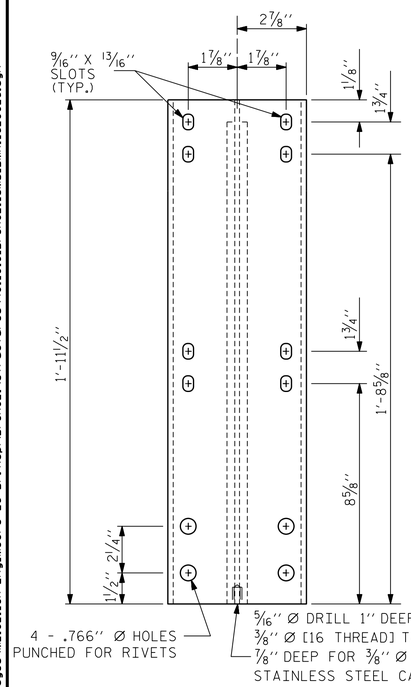

FRONT ELEVATION

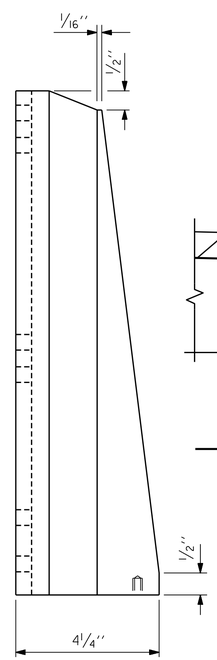

SIDE ELEVATION

DETAILS OF POST

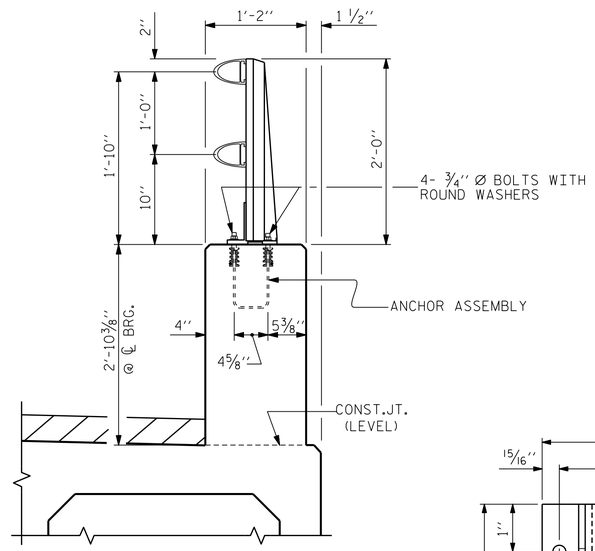

SECTION THRU PARAPET AND RAIL

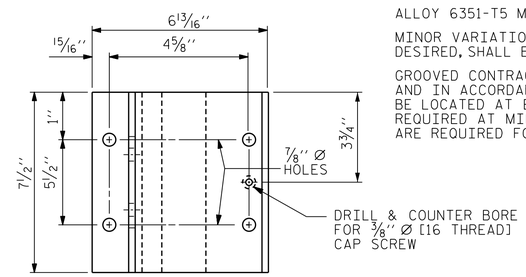

PLAN

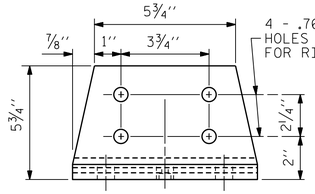

FRONT ELEVATION

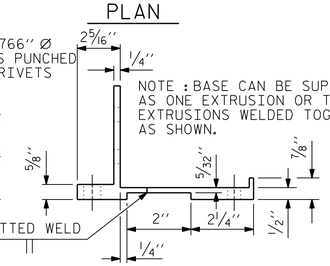

SIDE ELEVATION

POST BASE DETAILS

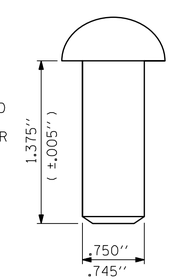

RIVET DETAIL

NOTES

AT THE CONTRACTOR'S OPTION, METAL RAIL MAY BE EITHER ALUMINUM OR GALVANIZED STEEL IN ACCORDANCE WITH THE REQUIREMENTS OF THE GENERAL NOTES AND THE FOLLOWING SPECIFICATIONS FOR THE ALTERNATE MATERIALS; HOWEVER, THE CONTRACTOR WILL BE REQUIRED TO USE THE SAME RAIL MATERIAL ON ALL STRUCTURES ON THE PROJECT FOR WHICH METAL RAIL IS DESIGNATED.

UNLESS OTHERWISE REQUIRED IN THE CONTRACT DOCUMENTS, THE CONTRACTOR HAS THE OPTION TO USE AN ALTERNATE TO THE 2 BAR METAL RAIL. THE ALTERNATE RAIL SHALL MEET THE REQUIREMENTS OF THE AASHTO LRFDBRIDGE DESIGN SPECIFICATIONS AND MUST BE LISTED ON THE DEPARTMENT'S APPROVED PRODUCTS LIST (APL) UNDER "2 BAR METAL RAIL ALTERNATE". ADJUSTMENTS TO THE CONCRETE PARAPET WILL NOT BE ALLOWED.

ALUMINUM RAILS

MATERIAL FOR POSTS, BASES AND RAILS, EXPANSION BARS AND CLAMP BARS SHALL BE ASTM B-221 ALLOY 6061-T6.

MATERIAL FOR RIVETS SHALL BE ASTM B316 ALLOY 6061-T6. RIVETS SHALL BE STANDARD BUTTON HEAD AND CONE POINT COLD DRIVEN AS PER DRAWING.

THE BASE OF RAIL POSTS, OR ANY OTHER ALUMINUM SURFACE IN CONTACT WITH CONCRETE SHALL BE THOROUGHLY COATED WITH AN ALUMINUM IMPREGNATED CAULKING COMPOUND OF APPROVED QUALITY.

MATERIAL FOR SHIMS TO BE ASTM B209 ALLOY 6061-T6.

GALVANIZED STEEL RAILS

MATERIAL AND GALVANIZING ARE TO CONFORM TO THE FOLLOWING SPECIFICATIONS:

POST, POST BASES, RAILS, EXPANSION BARS AND CLAMP BARS: ASTM A36 GRADE 36 STRUCTURAL STEEL - GALVANIZED TO ASTM A123.

RIVETS: RIVETS SHALL MEET THE REQUIREMENTS OF ASTM A502 FOR GRADE 1 RIVETS.

THE CUT ENDS OF GALVANIZED STEEL RAILING, AFTER GRINDING SMOOTH SHALL BE GIVEN TWO COATS OF ZINC RICH PAINT MEETING THE REQUIREMENTS OF FEDERAL SPECIFICATION MIL-P-26915 USAF TYPE 1, OR OF FEDERAL SPECIFICATIONS TT-P-641.

SHIMS: SHIMS SHALL MEET THE REQUIREMENTS OF ASTM A1011 FOR GRADE 36, 40, 45, OR ASTM A1008 FOR GRADE C AND SHALL BE GALVANIZED IN ACCORDANCE WITH ASTM A123.

RAIL CAPS: RAIL CAPS SHALL MEET THE REQUIREMENTS OF ASTM A1011 FOR GRADE 36, 40, 45 OR ASTM A1008 FOR GRADE C AND SHALL BE GALVANIZED IN ACCORDANCE WITH ASTM A123.

GENERAL NOTES

RAILING SHALL BE CONTINUOUS FROM END POST TO END POST OF BRIDGE. EACH JOINT IN RAIL LENGTH SHALL BE SPLICED AS DETAILED. PANEL LENGTHS OF RAIL SHALL BE ATTACHED TO A MINIMUM OF THREE POSTS.

FOR END OF RAIL TO CLEAR FACE OF CONCRETE END POST DIMENSION, SEE STANDARD NO. BMR2.

CAP SCREWS SHALL BE ASTM F593 ALLOY 305 STAINLESS STEEL. WASHERS SHALL MEET THE REQUIREMENTS OF ASTM F844 EXCEPT THEY SHALL BE MADE FROM ALLOY 304 STAINLESS STEEL.

CERTIFIED MILL REPORTS ARE REQUIRED FOR RAILS AND POSTS. SHOP INSPECTION IS NOT REQUIRED.

METAL RAIL POSTS SHALL BE SET NORMAL TO CURB GRADE.

METHOD OF MEASUREMENT FOR METAL RAILS: FOR LENGTH OF METAL RAILS TO BE PAID FOR, SEE THE STANDARD SPECIFICATIONS.

CURVED RAIL USAGE: WHERE RAILS ARE TO BE USED ON BRIDGES ON HORIZONTAL AND/OR VERTICAL CURVATURE THE CONTRACTOR MAY, AT HIS OPTION, HAVE THE REQUIRED CURVATURE IN THE RAIL FORMED IN THE SHOP OR IN THE FIELD. IN EITHER EVENT, THE RAIL SHALL CONFORM WITHOUT BUCKLING OR KINKING TO THE REQUIRED CURVATURE IN A UNIFORM MANNER ACCEPTABLE TO THE ENGINEER.

TO INSURE FUTURE IDENTIFICATION OF THE FABRICATOR, A PERMANENT IDENTIFYING MARK SHALL BE PLACED ON EACH POST. THE METHOD OF MARKING AND LOCATION SHALL BE SUCH THAT IT DOES NOT DETRACT FROM THE APPEARANCE OF THE POST, BUT REMAINS VISIBLE AFTER RAIL PLACEMENT.

SHIMS SHALL BE USED AS NECESSARY FOR POST ALIGNMENT.

ALLOY 6351-T5 MAY BE SUBSTITUTED FOR ALLOY 6061-T6 WHERE APPLICABLE.

MINOR VARIATIONS IN DETAILS OF METAL RAIL WILL BE CONSIDERED. DETAILS OF SUCH VARIATIONS, IF DESIRED, SHALL BE SUBMITTED FOR APPROVAL.

GROOVED CONTRACTION JOINTS, 1/2" IN DEPTH, SHALL BE TOOLED IN ALL EXPOSED FACES OF THE PARAPET AND IN ACCORDANCE WITH ARTICLE 825-10(B) OF THE STANDARD SPECIFICATIONS. A CONTRACTION JOINT SHALL BE LOCATED AT EACH THIRD POINT BETWEEN PARAPET EXPANSION JOINTS. ONLY ONE CONTRACTION JOINT IS REQUIRED AT MIDPOINT OF PARAPET SEGMENTS LESS THAN 20 FEET IN LENGTH AND NO CONTRACTION JOINTS ARE REQUIRED FOR THOSE SEGMENTS LESS THAN 10 FEET IN LENGTH.

PAY LENGTH = 194.38 LIN. FT.

PROJECT NO. BP8.R021
MOORE/MONTGOMERY COUNTY
STATION: 16+50.00 -L-

SHEET 1 OF 2

STATE OF NORTH CAROLINA
DEPARTMENT OF TRANSPORTATION
RALEIGH

STANDARD

2 BAR METAL RAIL

NORTH CAROLINA PROFESSIONAL SEAL 24939 ENGINEER BYRON E. ATKINSON
12/18/2024

ASSEMBLED BY:	J.I. BREWER	DATE:	12/2024
CHECKED BY :	B.E. ATKINSON	DATE:	12/2024
DESIGN ENGINEER OF RECORD:	B.E. ATKINSON	DATE:	12/2024

DRAWN BY :	EEM	6/94	REV. 6/13 MAA/GM
CHECKED BY :	RGW	4/94	REV. 12/17 MAA/THC
			REV. 10/23 BNB/SNM

DOCUMENT NOT CONSIDERED FINAL UNLESS ALL SIGNATURES COMPLETED

MI ENGINEERING
1011 SCHAUB DRIVE, SUITE 100
RALEIGH, NC 27606
(919) 851-6606
FIRM PE NUMBER : P-0671

REVISIONS							SHEET NO.
NO.	BY:	DATE:	NO.	BY:	DATE:		S-10
1			3				TOTAL SHEETS
2			4				19

STD. NO. BMR3 (SHT 1)

12/18/2024
2:53:28 PM
User: blanning
Filename: N:\NC Bridges\M21021_CH Eng_Moore 26 Br. Rep\BP8R021\Structures\401_019_BP8R021_SMU_BMR1_620026.dgn

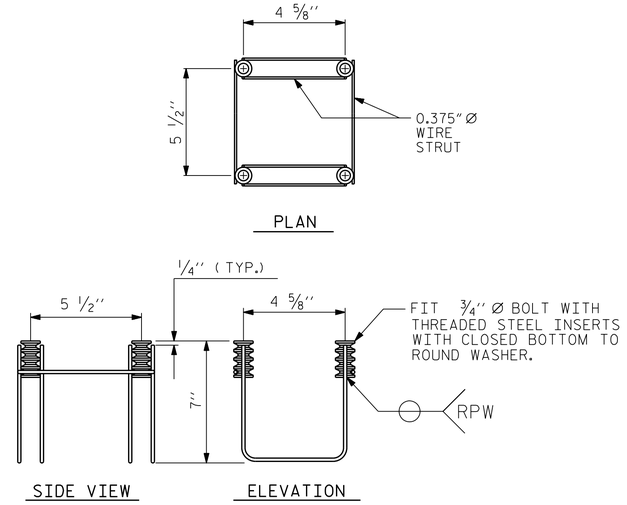

4-BOLT METAL RAIL ANCHOR ASSEMBLY

(36 ASSEMBLIES REQUIRED)

NOTES

STRUCTURAL CONCRETE ANCHOR ASSEMBLY

THE STRUCTURAL CONCRETE ANCHOR ASSEMBLY SHALL CONSIST OF THE FOLLOWING COMPONENTS :

A. FERRULES SHALL BE MADE FROM STEEL MEETING THE REQUIREMENTS OF AASHTO M169, GRADE 12L14 AND SHALL HAVE A MINIMUM LENGTH OF THREADS OF 2'' FOR 3/4'' FERRULES.

B. 4 - 3/4'' Ø X 2 1/2'' BOLTS WITH WASHERS. BOLTS SHALL CONFORM TO THE REQUIREMENTS OF ASTM A307. BOLTS AND WASHERS SHALL BE GALVANIZED. AT THE CONTRACTOR'S OPTION, STAINLESS STEEL BOLTS AND WASHERS MAY BE USED AS AN ALTERNATE FOR THE 3/4'' Ø X 2 1/2'' GALVANIZED BOLTS AND WASHERS. THEY SHALL CONFORM TO OR EXCEED THE MECHANICAL REQUIREMENTS OF ASTM A307. THE USE OF THIS ALTERNATE SHALL BE APPROVED BY THE ENGINEER.

C. WIRE STRUT SHOWN IN THE CONCRETE ANCHOR ASSEMBLY DETAIL IS THE MINIMUM ALLOWABLE SIZE AND SHALL HAVE A MINIMUM TENSILE STRENGTH OF 100,000 PSI. AS AN OPTION, A 7/16'' Ø WIRE STRUT WITH A MINIMUM TENSILE STRENGTH OF 90,000 PSI IS ACCEPTABLE.

D. THE METAL RAIL ANCHOR ASSEMBLIES TO BE HOT DIPPED GALVANIZED TO CONFORM TO REQUIREMENTS OF ASTM A123.

E. THE COST OF THE METAL RAIL ANCHOR ASSEMBLY WITH BOLTS AND WASHERS COMPLETE IN PLACE SHALL BE INCLUDED IN THE PRICE BID FOR LINEAR FEET OF METAL RAIL.

F. BOLTS TO BE TIGHTENED ONE-HALF TURN WITH A WRENCH FROM A FINGER-TIGHT POSITION.

THE CONTRACTOR MAY USE ADHESIVELY ANCHORED ANCHOR BOLTS IN PLACE OF THE METAL RAIL ANCHOR ASSEMBLY. LEVEL ONE FIELD TESTING IS REQUIRED, AND THE YIELD LOAD OF THE 3/4'' Ø BOLT IS 10 KIPS. FOR ADHESIVELY ANCHORED ANCHOR BOLTS OR DOWELS, SEE THE STANDARD SPECIFICATIONS.

WHEN ADHESIVELY ANCHORED ANCHOR BOLTS ARE USED, BOLTS SHALL MEET THE REQUIREMENTS OF ASTM F593 ALLOY 304 STAINLESS STEEL WITH MINIMUM 75,000 PSI ULTIMATE STRENGTH. NUTS SHALL MEET THE REQUIREMENTS OF ASTM F594 ALLOY 304 STAINLESS STEEL AND WASHERS SHALL MEET THE REQUIREMENTS OF ASTM F844 EXCEPT THEY SHALL BE MADE FROM ALLOY 304 STAINLESS STEEL.

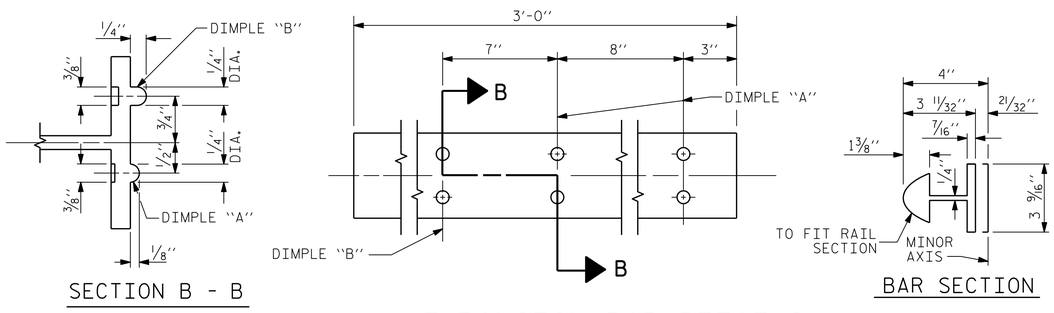

EXPANSION BAR DETAILS

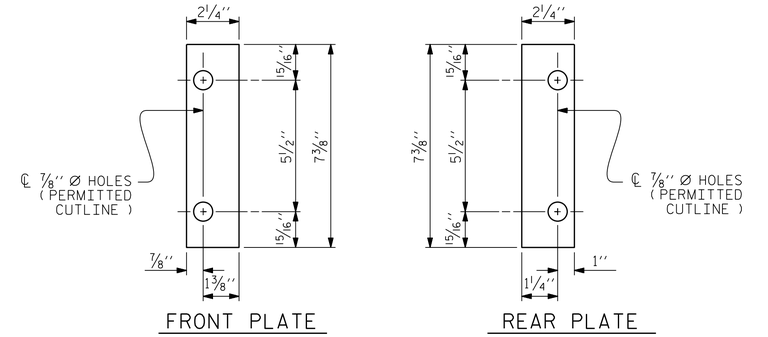

SHIM DETAILS

NOTE :
SHIMS MAY BE CUT ALONG PERMITTED CUTLINE OR SLOTTED TO EDGE OF PLATE TO FACILITATE PLACEMENT.

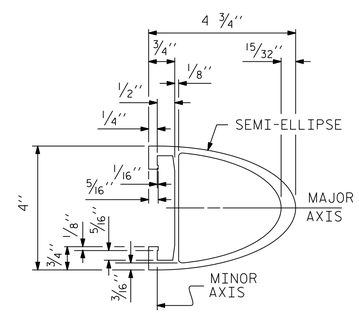

RAIL SECTION

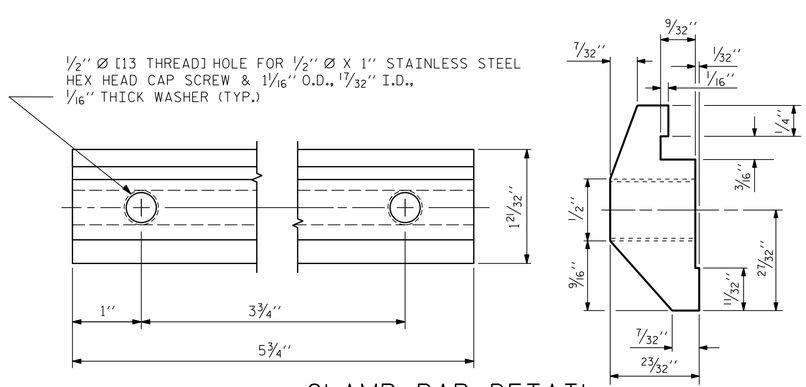

CLAMP BAR DETAIL

(4 REQUIRED PER POST)

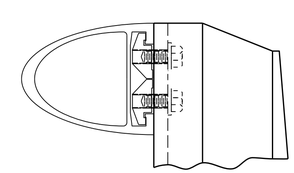

CLAMP ASSEMBLY

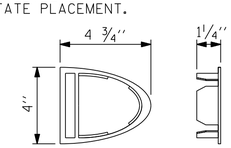

RAIL CAP

PROJECT NO. BP8.R021

MOORE/MONTGOMERY COUNTY

STATION: 16+50.00 -L-

SHEET 2 OF 2

STATE OF NORTH CAROLINA
DEPARTMENT OF TRANSPORTATION
RALEIGH

STANDARD

2 BAR METAL RAIL

NORTH CAROLINA PROFESSIONAL SEAL 24939 ENGINEER BYRON E. ATKINSON

12/18/2024

DOCUMENT NOT CONSIDERED FINAL UNLESS ALL SIGNATURES COMPLETED

MI ENGINEERING
1011 SCHAUB DRIVE, SUITE 100
RALEIGH, NC 27606
(919) 851-6606
FIRM PE NUMBER : P-0671

REVISIONS						
NO.	BY:	DATE:	NO.	BY:	DATE:	
1			3			
2			4			

SHEET NO. S-11

TOTAL SHEETS 19

STD. NO. BMR4

ASSEMBLED BY:	J.I. BREWER	DATE:	12/2024
CHECKED BY :	B.E. ATKINSON	DATE:	12/2024
DESIGN ENGINEER OF RECORD:	B.E. ATKINSON	DATE:	12/2024

DRAWN BY : EEM	6/94	REV. 10/11	MAA/GM
CHECKED BY : RGW	6/94	REV. 12/17	MAA/THC
		REV. 10/23	BNB/SNM

12/18/2024
2:53:29 PM
User: blanning
Filename: N:\NC Bridges\M21021_CH Eng_Moore 26 Br_Repl\BP8R021\Structures\401_021_BPBR021_SMU_BMR2_620026.dgn

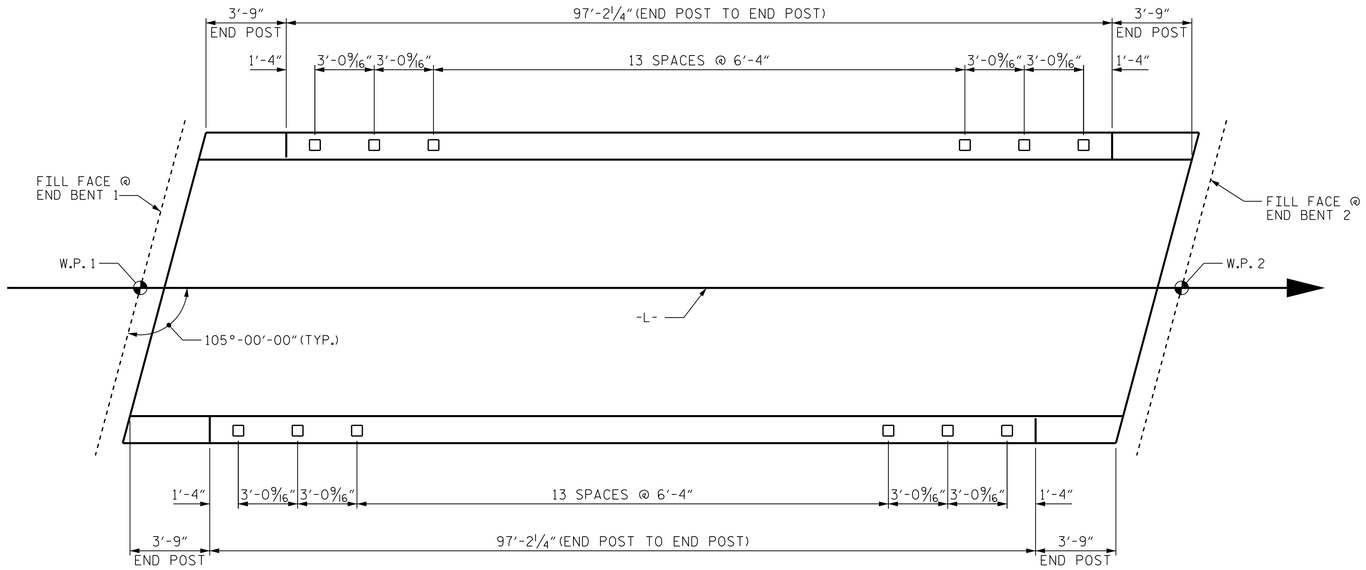

PLAN OF RAIL POST SPACINGS

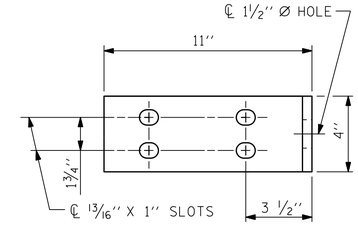

ELEVATION

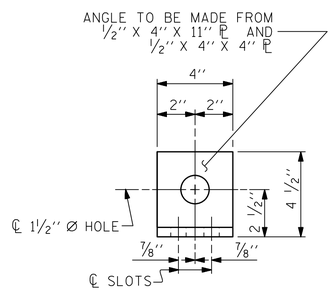

END VIEW (FIX AND EXP.)

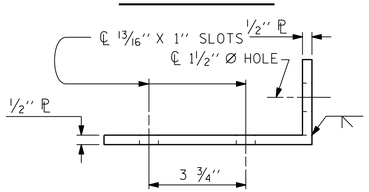

TOP VIEW

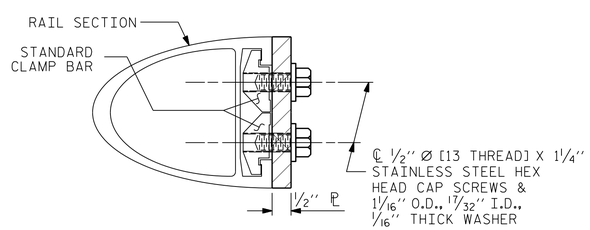

SECTION H-H (FIX)

DETAILS FOR ATTACHING METAL RAIL TO END POST

NOTES

STRUCTURAL CONCRETE INSERT

THE STRUCTURAL CONCRETE INSERT ASSEMBLY SHALL CONSIST OF THE FOLLOWING COMPONENTS:

A. FERRULES SHALL BE MADE FROM STEEL MEETING THE REQUIREMENTS OF AASHTO M169, GRADE 12L14 AND SHALL HAVE A MINIMUM LENGTH OF THREADS OF 1½".

B. 1 - ¾" Ø X 1⅝" BOLT WITH WASHER. BOLT SHALL CONFORM TO THE REQUIREMENTS OF ASTM A307. BOLT AND WASHER SHALL BE GALVANIZED. (AT THE CONTRACTOR'S OPTION, STAINLESS STEEL BOLT AND WASHER MAY BE USED AS AN ALTERNATE FOR THE ¾" Ø X 1⅝" GALVANIZED BOLT AND WASHER. THEY SHALL CONFORM TO OR EXCEED THE MECHANICAL REQUIREMENTS OF ASTM A307. THE USE OF THIS ALTERNATE SHALL BE APPROVED BY THE ENGINEER.)

C. WIRE STRUT SHOWN IN THE CONCRETE INSERT ASSEMBLY DETAIL IS THE MINIMUM ALLOWABLE SIZE AND SHALL HAVE A MINIMUM TENSILE STRENGTH OF 100,000 PSI. AS AN OPTION, A 7/16" Ø WIRE STRUT WITH A MINIMUM TENSILE STRENGTH OF 90,000 PSI IS ACCEPTABLE.

NOTES

METAL RAIL TO END POST CONNECTION

THE METAL RAIL TO END POST CONNECTION SHALL CONSIST OF THE FOLLOWING COMPONENTS:

A. ½" PLATES SHALL CONFORM TO ASTM A36 GRADE 36 AND SHALL BE GALVANIZED AFTER FABRICATION.

B. ¾" STRUCTURAL CONCRETE INSERT SHALL HAVE A WORKING LOAD SHEAR CAPACITY OF 4800 LBS. THE FERRULES SHALL ENGAGE A ¾"Ø X 1⅝" BOLT WITH 2" O.D. WASHER IN PLACE. THE ¾"Ø X 1⅝" BOLT SHALL HAVE N.C. THREADS.

C. CAP SCREWS FOR RAIL ATTACHMENT TO ANGLE SHALL CONFORM TO THE REQUIREMENTS OF ASTM F593 ALLOY 305 STAINLESS STEEL. CAP SCREWS TO BE CENTERED IN SLOTS AT 60°F.

D. STANDARD CLAMP BARS (SEE METAL RAIL SHEET).

E. ½" Ø PIPE SLEEVES (IF REQUIRED) TO BE GALVANIZED.

THE COST OF THE STANDARD CLAMP BARS AND CAP SCREWS USED IN THE METAL RAIL TO END POST CONNECTION SHALL BE INCLUDED IN THE UNIT CONTRACT PRICE BID FOR LINEAR FEET OF 1 OR 2 BAR METAL RAILS.

THE ¾" STRUCTURAL CONCRETE INSERT WITH BOLT SHALL BE ASSEMBLED IN THE SHOP.

THE COST OF THE ¾" STRUCTURAL CONCRETE INSERT ASSEMBLY, AND THE ½" PLATES COMPLETE IN PLACE SHALL BE INCLUDED IN THE VARIOUS PAY ITEMS.

THE CONTRACTOR, AT HIS OPTION, MAY USE AN ADHESIVE BONDING SYSTEM IN LIEU OF THE STRUCTURAL CONCRETE INSERT EMBEDDED IN THE END POST. IF THE ADHESIVE BONDING SYSTEM IS USED, THE ¾" Ø X 1⅝" BOLT WITH WASHER SHALL BE REPLACED WITH A ¾"Ø X 6½" BOLT AND 2" O.D. WASHER. ALL SPECIFICATIONS THAT APPLY TO THE ¾" Ø X 1⅝" BOLT SHALL APPLY TO THE ¾"Ø X 6 ½" BOLT. FIELD TESTING OF THE ADHESIVE BONDING SYSTEM IS NOT REQUIRED.

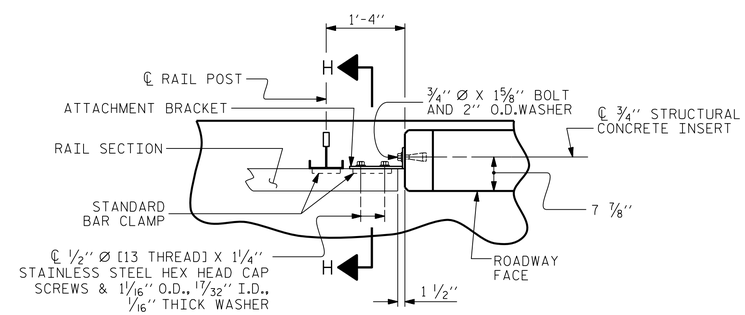

PLAN - RAIL AND END POST

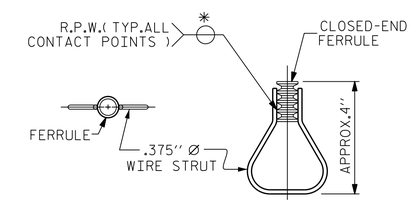

PLAN ELEVATION

STRUCTURAL CONCRETE INSERT

* EACH WELDED ATTACHMENT OF WIRE TO FERRULE SHALL DEVELOP THE TENSILE STRENGTH OF THE WIRE.

PROJECT NO. BP8.R021

MOORE/MONTGOMERY COUNTY

STATION: 16+50.00 -L-

NORTH CAROLINA PROFESSIONAL SEAL 24939 ENGINEER BYRON E. ATKINSON

12/18/2024

STATE OF NORTH CAROLINA
DEPARTMENT OF TRANSPORTATION
RALEIGH

STANDARD

RAIL POST SPACINGS
AND
END OF RAIL DETAILS

FOR ONE OR TWO BAR METAL RAILS

DOCUMENT NOT CONSIDERED FINAL UNLESS ALL SIGNATURES COMPLETED

MI ENGINEERING
1011 SCHAUB DRIVE, SUITE 100
RALEIGH, NC 27606
(919) 851-6606
FIRM PE NUMBER : P-0671

REVISIONS							SHEET NO.
NO.	BY:	DATE:	NO.	BY:	DATE:		S-12
1			3				TOTAL SHEETS
2			4				19

ASSEMBLED BY:	J.I. BREWER	DATE:	12/2024
CHECKED BY :	B.E. ATKINSON	DATE:	12/2024
DESIGN ENGINEER OF RECORD:	B.E. ATKINSON	DATE:	12/2024

DRAWN BY :	FCJ 1/88	REV. 10/1/11	MAA/GM
CHECKED BY :	CRK 3/89	REV. 12/17	MAA/THC
		REV. 10/23	BNB/SNM

STD. NO. BMR2

12/18/2024
2:53:31 PM
User: blanning
Filename: N:\NC Bridges\W21021_CH Eng_Moore 26 Br. Repl\BP8R021\Structures\401.023_BP8R021_SMU_BMR3_620026.dgn

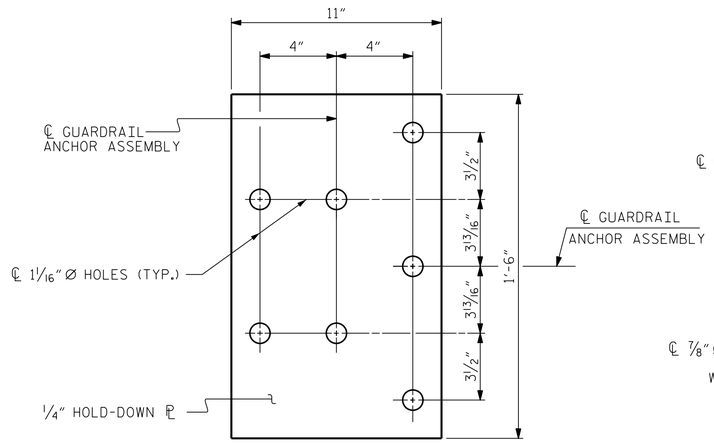

PLAN

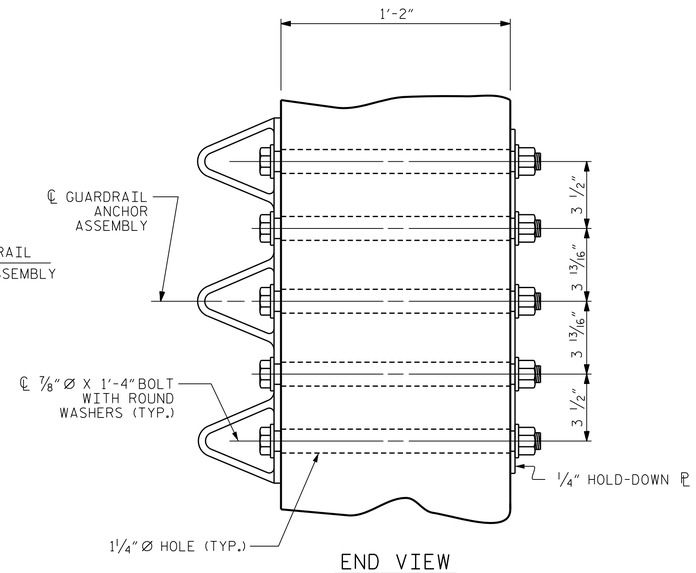

END VIEW

GUARDRAIL ANCHOR ASSEMBLY DETAILS

NOTES

THE GUARDRAIL ANCHOR ASSEMBLY SHALL CONSIST OF A 1/4" HOLD DOWN PLATE AND 7 - 7/8" Ø BOLTS WITH NUTS AND WASHERS.

THE HOLD-DOWN PLATE SHALL CONFORM TO AASHTO M270 GRADE 36. AFTER FABRICATION, THE HOLD-DOWN PLATE SHALL BE HOT-DIP GALVANIZED IN ACCORDANCE WITH AASHTO M111.

BOLTS SHALL CONFORM TO THE REQUIREMENTS OF ASTM A307 AND NUTS SHALL CONFORM TO THE REQUIREMENTS OF AASHTO M291. BOLTS, NUTS AND WASHERS SHALL BE GALVANIZED. (AT THE CONTRACTOR'S OPTION, STAINLESS STEEL BOLTS, NUTS AND WASHERS MAY BE USED AS AN ALTERNATE FOR THE 7/8" Ø GALVANIZED BOLTS, NUTS AND WASHERS. THEY SHALL CONFORM TO OR EXCEED THE MECHANICAL REQUIREMENTS OF ASTM A307. THE USE OF THIS ALTERNATE SHALL BE APPROVED BY THE ENGINEER.)

THE GUARDRAIL ANCHOR ASSEMBLY IS REQUIRED AT ALL POINTS WHERE APPROACH GUARDRAIL IS TO BE ATTACHED TO THE END OF BARRIER RAIL. FOR POINTS OF ATTACHMENT, SEE SKETCH.

AFTER INSTALLATION, THE EXPOSED THREAD OF THE BOLT SHALL BE BURRED WITH A SHARP POINTED TOOL.

THE COST OF THE GUARDRAIL ANCHOR ASSEMBLY SHALL BE INCLUDED IN THE UNIT CONTRACT PRICE BID FOR VERTICAL CONCRETE BARRIER RAIL.

THE VERTICAL REINFORCING BARS MAY BE SHIFTED SLIGHTLY IN THE VERTICAL CONCRETE BARRIER RAIL TO CLEAR ASSEMBLY BOLTS.

THE 1 1/4" Ø HOLES SHALL BE FORMED OR DRILLED WITH A CORE BIT. IMPACT TOOLS WILL NOT BE PERMITTED. ANY CONCRETE DAMAGED BY THIS WORK SHALL BE REPAIRED TO THE SATISFACTION OF THE ENGINEER.

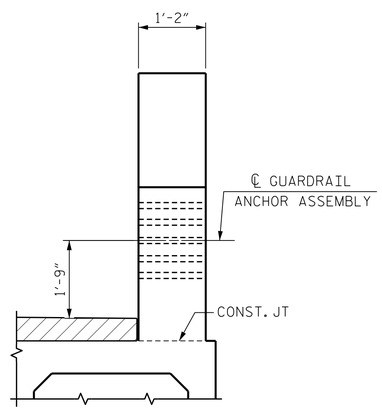

END VIEW
(TWO BAR METAL RAIL)

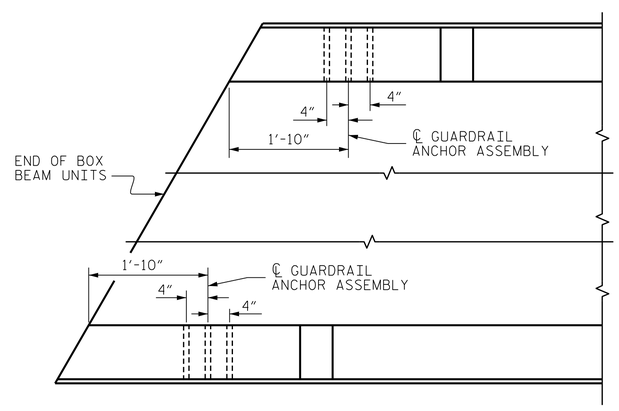

PLAN

LOCATION OF GUARDRAIL ANCHOR AT END POST

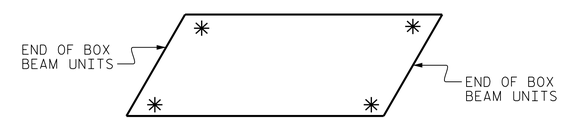

SKETCH SHOWING POINTS OF ATTACHMENT

✳ DENOTES GUARDRAIL ANCHOR ASSEMBLY

PROJECT NO. BP8.R021
MOORE/MONTGOMERY COUNTY
STATION: 16+50.00 -L-

NORTH CAROLINA PROFESSIONAL SEAL 24939 ENGINEER BYRON E. ATKINSON
12/18/2024

STATE OF NORTH CAROLINA
DEPARTMENT OF TRANSPORTATION
RALEIGH

GUARDRAIL ANCHORAGE DETAILS FOR METAL RAILS

DOCUMENT NOT CONSIDERED FINAL UNLESS ALL SIGNATURES COMPLETED

MI ENGINEERING
1011 SCHAUB DRIVE, SUITE 100
RALEIGH, NC 27606
(919) 851-6606
FIRM PE NUMBER : P-0671

REVISIONS						
NO.	BY:	DATE:	NO.	BY:	DATE:	
1			3			
2			4			

SHEET NO. S-13
TOTAL SHEETS 19

DRAWN BY :	B.E. LANNING	DATE :	12/2024
CHECKED BY :	B.E. ATKINSON	DATE :	12/2024
DESIGN ENGINEER OF RECORD :	B.E. ATKINSON	DATE :	12/2024

12/18/2024
2:53:33 PM
User: blanning
Filename: N:\NC Bridges\M21021_CH Eng_Moore 26 Br. Repl\BP8R021\Structures\401_025_BP8R021_SMU_GRA1_620026.dgn

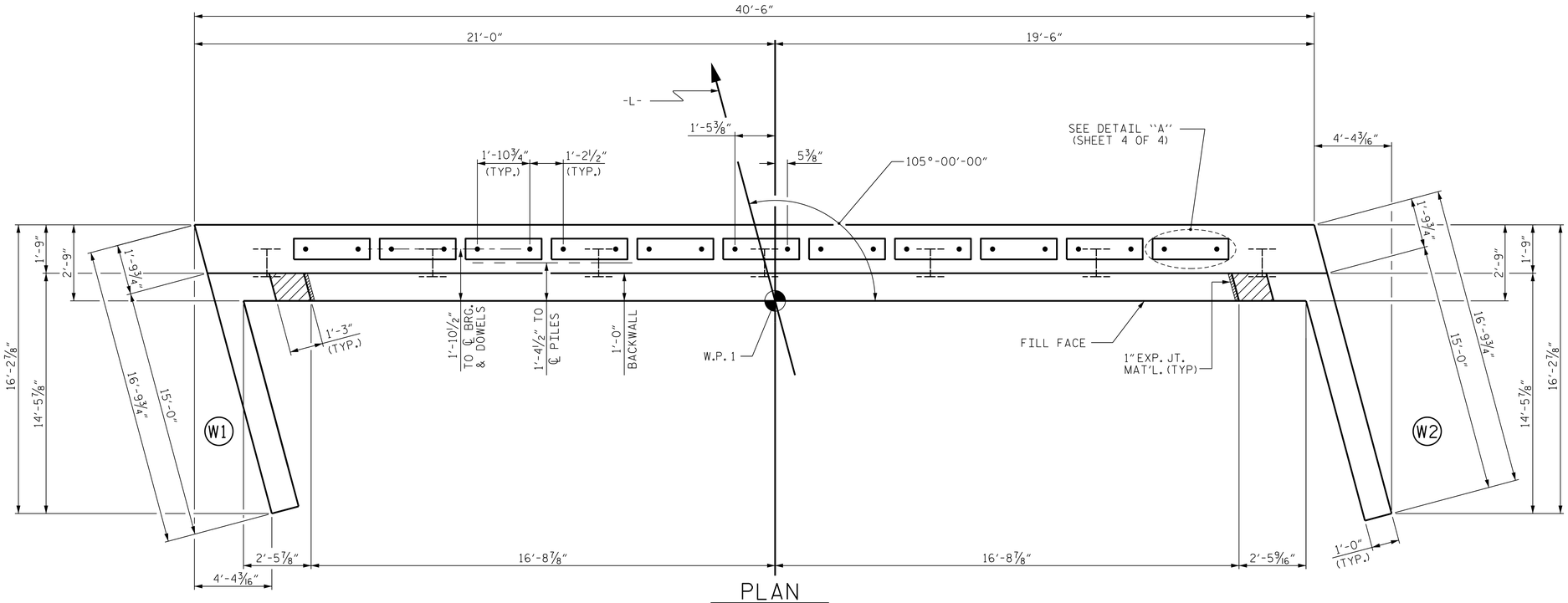

PLAN

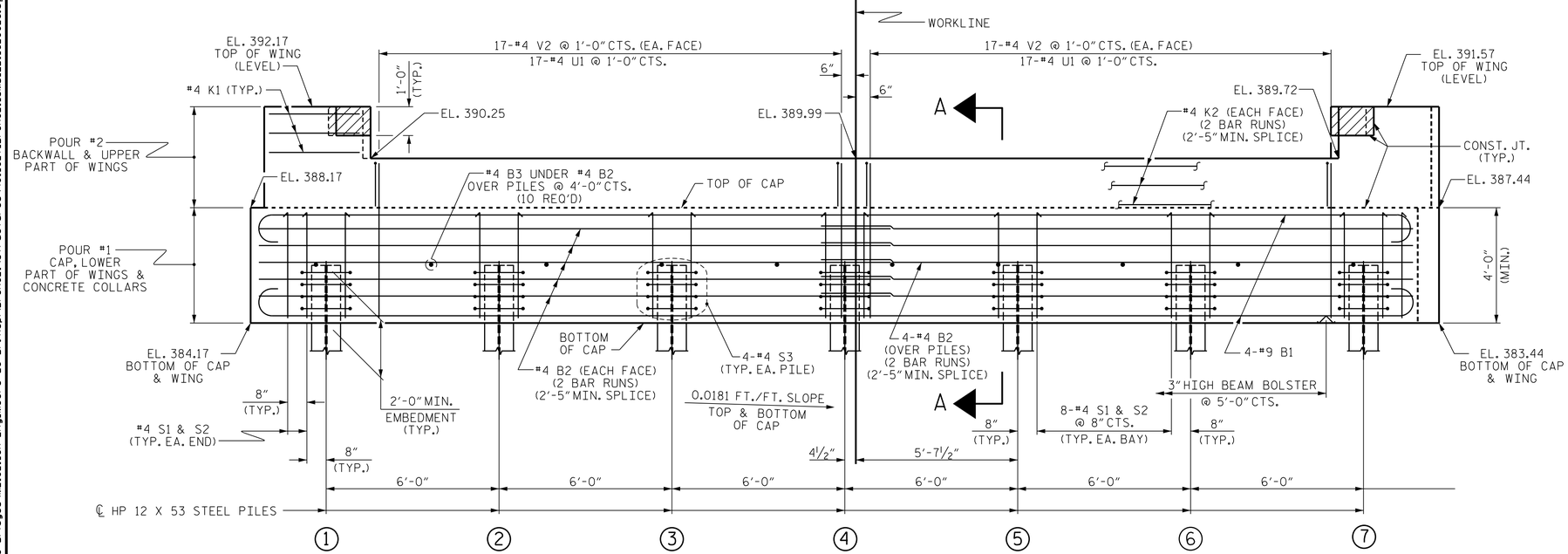

ELEVATION

WINGS NOT SHOWN FOR CLARITY.
FOR SECTION A-A, SEE SHEET 4 OF 4.
CONCRETE COLLARS FOR STEEL PILES NOT SHOWN IN PLAN AND ELEVATION VIEWS FOR CLARITY.
SEE "CORROSION PROTECTION FOR STEEL PILES DETAIL", SHEET 4 OF 4.

NOTES

STIRRUPS IN CAP MAY BE SHIFTED AS NECESSARY TO CLEAR DOWELS.

THE CONCRETE IN THE SHADED AREA OF THE WING SHALL BE POURED AFTER THE VERTICAL CONCRETE BARRIER RAIL IS CAST IF SLIP FORMING IS USED.

FOR PILE SPLICE DETAILS, SEE SHEET 4 OF 4.

FOR WING DETAILS, SEE SHEET 3 OF 4.

TOP OF PILE ELEVATIONS

1	386.11
2	386.00
3	385.90
4	385.79
5	385.88
6	385.57
7	385.46

PROJECT NO. BP8.R021
MOORE/MONTGOMERY COUNTY
STATION: 16+50.00 -L-

SHEET 1 OF 4

STATE OF NORTH CAROLINA
DEPARTMENT OF TRANSPORTATION
RALEIGH

SUBSTRUCTURE

END BENT No. 1

NORTH CAROLINA PROFESSIONAL SEAL 24939 ENGINEER BYRON E. ATKINSON
12/18/2024

DOCUMENT NOT CONSIDERED FINAL UNLESS ALL SIGNATURES COMPLETED

MI ENGINEERING
1011 SCHAUB DRIVE, SUITE 100
RALEIGH, NC 27606
(919) 851-6606
FIRM PE NUMBER : P-0671

REVISIONS							SHEET NO.
NO.	BY:	DATE:	NO.	BY:	DATE:		S-14
1			3				TOTAL SHEETS
2			4				19

DRAWN BY :	B.E. LANNING	DATE :	12/2024
CHECKED BY :	B.E. ATKINSON	DATE :	12/2024
DESIGN ENGINEER OF RECORD :	B.E. ATKINSON	DATE :	12/2024

12/18/2024
2:53:34 PM
User: blanning
Filename: N:\NC Bridges\M21021_CH Eng_Moore 26 Br. Rep\BP8R021\Structures\401_027_BP8R021_SMU_EB1_620026.dgn

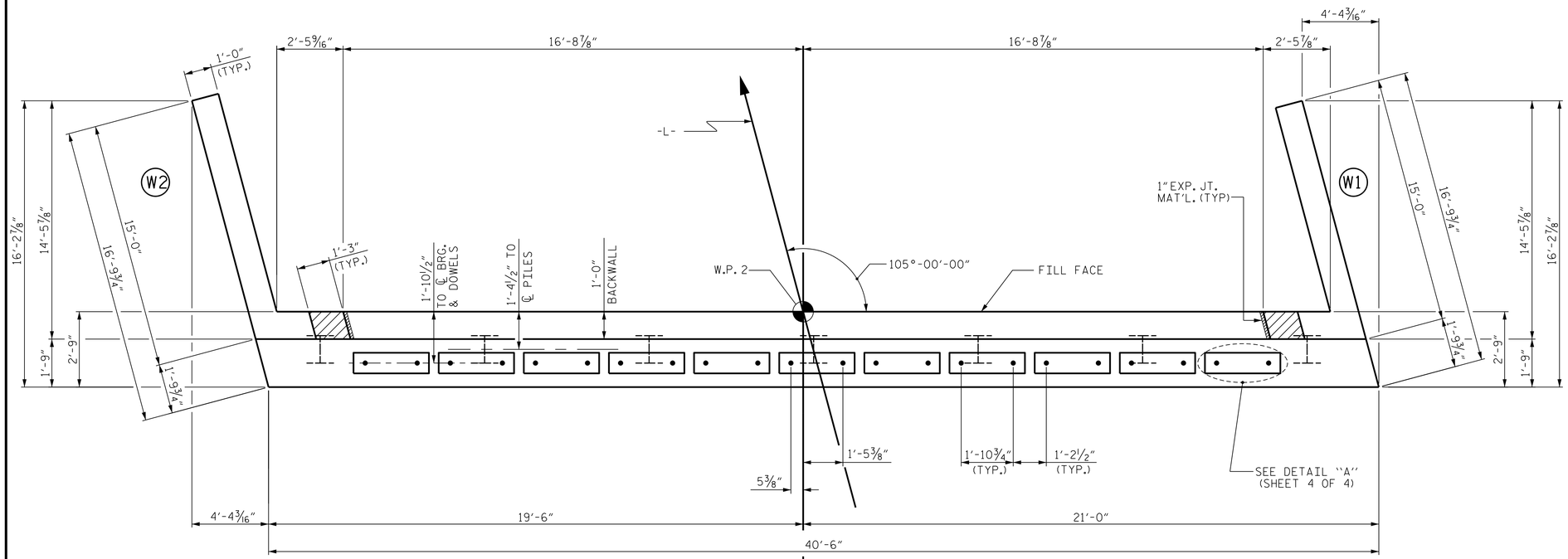

PLAN

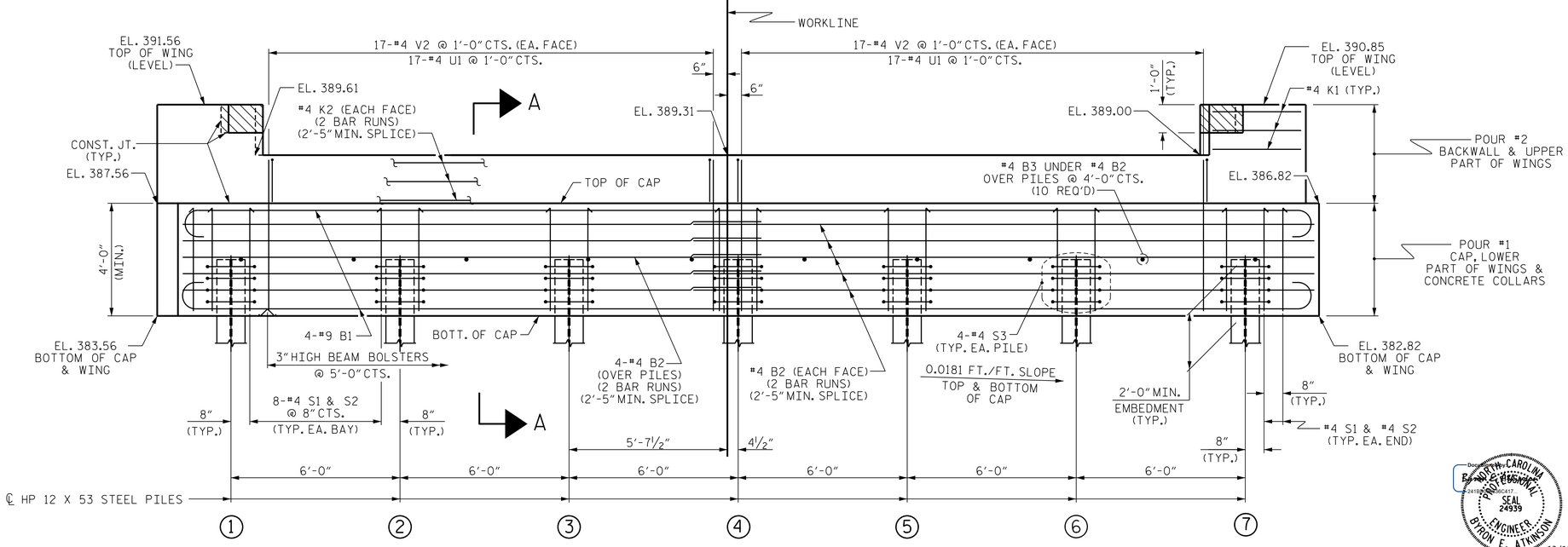

ELEVATION

WINGS NOT SHOWN FOR CLARITY.
FOR SECTION A-A, SEE SHEET 4 OF 4.
CONCRETE COLLARS FOR STEEL PILES NOT SHOWN IN PLAN AND ELEVATION VIEWS FOR CLARITY.
SEE "CORROSION PROTECTION FOR STEEL PILES DETAIL", SHEET 4 OF 4.

NOTES

STIRRUPS IN CAP MAY BE SHIFTED AS NECESSARY TO CLEAR DOWELS.

THE CONCRETE IN THE SHADED AREA OF THE WING SHALL BE POURED AFTER THE VERTICAL CONCRETE BARRIER RAIL IS CAST IF SLIP FORMING IS USED.

FOR PILE SPLICE DETAILS, SEE SHEET 4 OF 4.

FOR WING DETAILS, SEE SHEET 3 OF 4.

TOP OF PILE ELEVATIONS

1	385.53
2	385.42
3	385.31
4	385.20
5	385.09
6	384.98
7	384.87

PROJECT NO. BP8.R021
MOORE/MONTGOMERY COUNTY
STATION: 16+50.00 -L-

SHEET 2 OF 4

STATE OF NORTH CAROLINA
DEPARTMENT OF TRANSPORTATION
RALEIGH

SUBSTRUCTURE

END BENT No. 2

NORTH CAROLINA PROFESSIONAL SEAL 24939 ENGINEER BYRON E. ATKINSON
12/18/2024

DOCUMENT NOT CONSIDERED FINAL UNLESS ALL SIGNATURES COMPLETED

MI ENGINEERING
1011 SCHAUB DRIVE, SUITE 100
RALEIGH, NC 27606
(919) 851-6606
FIRM PE NUMBER : P-0671

REVISIONS								SHEET NO.
NO.	BY:	DATE:	NO.	BY:	DATE:			S-15
1			3					TOTAL SHEETS
2			4					19

DRAWN BY :	B.E. LANNING	DATE :	12/2024
CHECKED BY :	B.E. ATKINSON	DATE :	12/2024
DESIGN ENGINEER OF RECORD :	B.E. ATKINSON	DATE :	12/2024

12/18/2024
2:53:35 PM
User: blanning
Filename: N:\NC Bridges\M21021_CH Eng_Moore 26 Br. Rep\BP8R021\Structures\401_029_BP8R021_SMU_EB2_620026.dgn

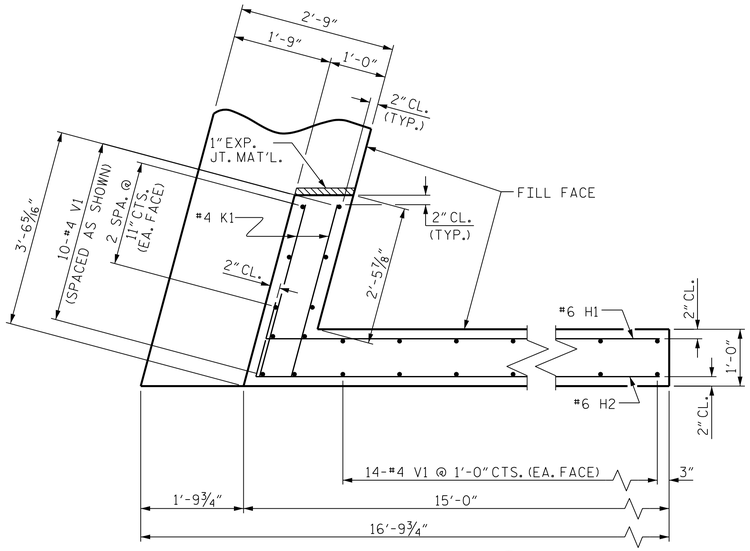

PLAN OF WING (W1)

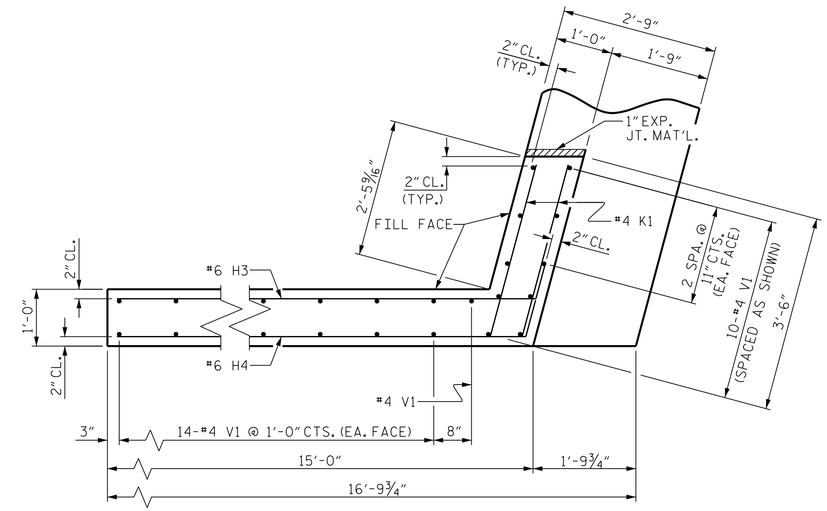

PLAN OF WING (W2)

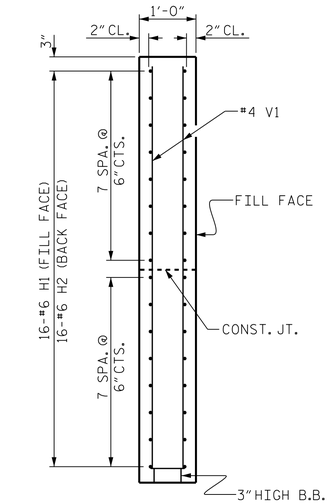

SECTION X-X

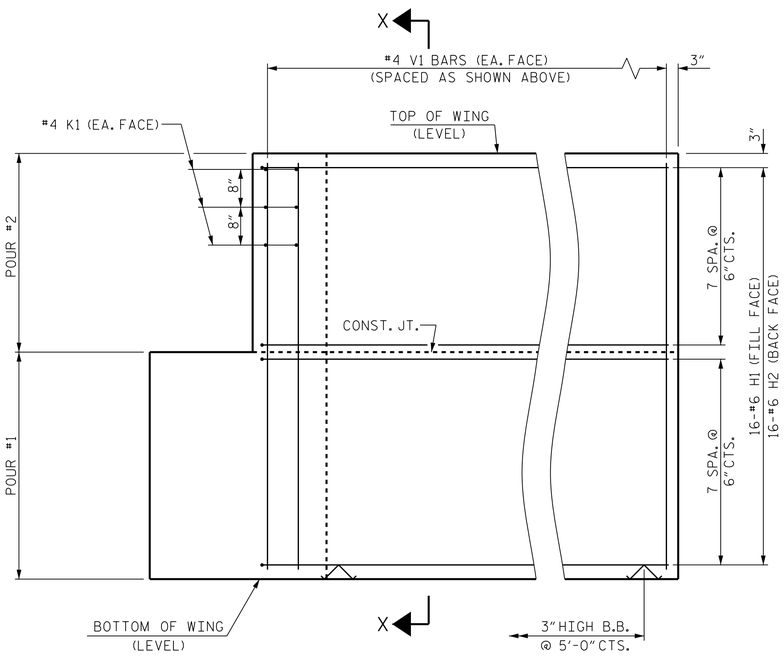

ELEVATION OF WING (W1)

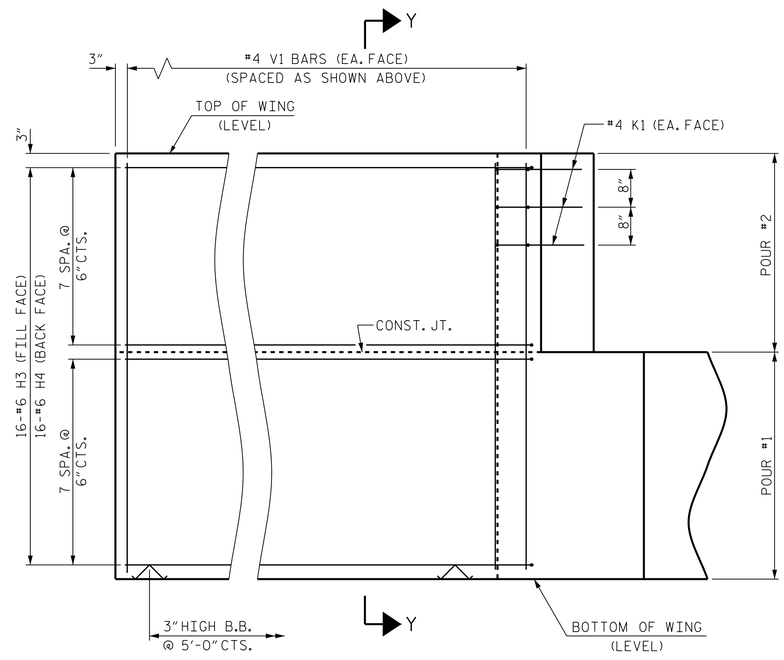

ELEVATION OF WING (W2)

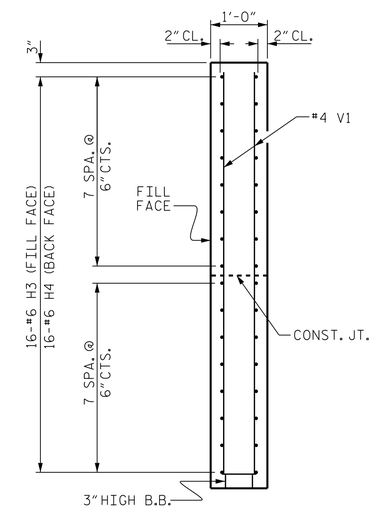

SECTION Y-Y

WING DETAILS

PROJECT NO. BP8.R021

MOORE/MONTGOMERY COUNTY

STATION: 16+50.00 -L-

SHEET 3 OF 4

STATE OF NORTH CAROLINA
DEPARTMENT OF TRANSPORTATION
RALEIGH

SUBSTRUCTURE

END BENT
WING DETAILS

NORTH CAROLINA PROFESSIONAL SEAL 24939 ENGINEER BYRON E. ATKINSON
12/18/2024

DOCUMENT NOT CONSIDERED FINAL UNLESS ALL SIGNATURES COMPLETED

MI ENGINEERING
1011 SCHAUB DRIVE, SUITE 100
RALEIGH, NC 27606
(919) 851-6606
FIRM PE NUMBER : P-0671

REVISIONS							SHEET NO.
NO.	BY:	DATE:	NO.	BY:	DATE:		S-16
1			3				TOTAL SHEETS
2			4				19

DRAWN BY :	B.E. LANNING	DATE :	12/2024
CHECKED BY :	B.E. ATKINSON	DATE :	12/2024
DESIGN ENGINEER OF RECORD :	B.E. ATKINSON	DATE :	12/2024

12/18/2024
2:53:37 PM
User: blanning
Filename: N:\NC Bridges\M21021_CH Eng_Moore 26 Br. Rep\BP8R021\Structures\401_031_BP8R021_SMU_EB3_620026.dgn

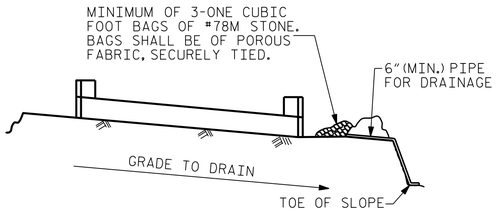

BAGGED STONE AND PIPE SHALL BE PLACED IMMEDIATELY AFTER COMPLETION OF END BENT EXCAVATION. PIPE MAY BE EITHER CONCRETE, CORRUGATED STEEL, CORRUGATED ALUMINUM ALLOY, OR CORRUGATED PLASTIC. PERFORATED PIPE WILL NOT BE ALLOWED.

BAGGED STONE SHALL REMAIN IN PLACE UNTIL THE ENGINEER DIRECTS THAT IT BE REMOVED. THE CONTRACTOR SHALL REMOVE AND DISPOSE OF SILT ACCUMULATIONS AT BAGGED STONE WHEN SO DIRECTED BY THE ENGINEER. BAGS SHALL BE REMOVED AND REPLACED WHENEVER THE ENGINEER DETERMINES THAT THEY HAVE DETERIORATED AND LOST THEIR EFFECTIVENESS.

NO SEPARATE PAYMENT WILL BE MADE FOR THIS WORK AND THE ENTIRE COST OF THIS WORK SHALL BE INCLUDED IN THE UNIT CONTRACT PRICE BID FOR THE SEVERAL PAY ITEMS.

TEMPORARY DRAINAGE AT END BENT

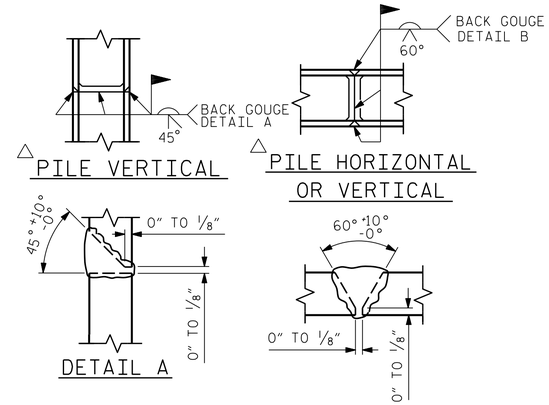

△ POSITION OF PILE DURING WELDING.

PILE SPLICE DETAILS

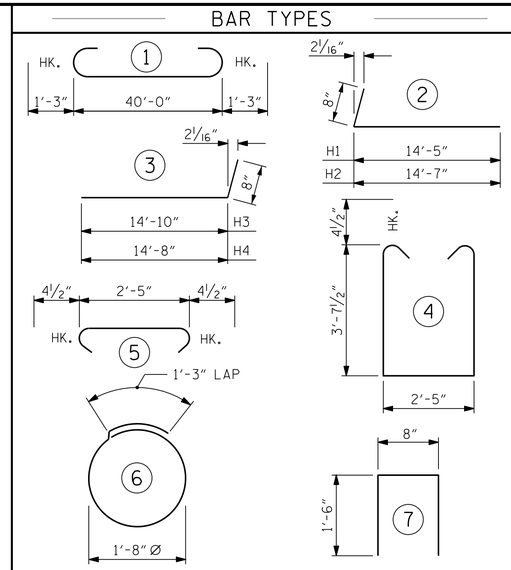

ALL BAR DIMENSIONS ARE OUT TO OUT.

BILL OF MATERIAL
FOR ONE END BENT

BAR	NO.	SIZE	TYPE	LENGTH	WEIGHT
B1	8	#9	1	42'-6"	1156
B2	28	#4	STR	21'-4"	399
B3	10	#4	STR	2'-5"	16
D1	22	#8	STR	2'-3"	132
H1	16	#6	2	15'-1"	362
H2	16	#6	2	15'-3"	366
H3	16	#6	3	15'-6"	372
H4	16	#6	3	15'-4"	368
K1	12	#4	STR	3'-1"	25
K2	12	#4	STR	21'-4"	171
S1	52	#4	4	10'-5"	362
S2	52	#4	5	3'-2"	110
S3	28	#4	6	6'-6"	122
U1	34	#4	7	3'-8"	83
V1	77	#4	STR	7'-8"	394
V2	68	#4	STR	5'-9"	261

REINFORCING STEEL (FOR ONE END BENT) 4699 LBS.

CLASS A CONCRETE BREAKDOWN (FOR ONE END BENT)

POUR #1	CAP, LOWER PART OF WINGS & COLLARS	21.9 C.Y.
POUR #2	BACKWALL & UPPER PART OF WINGS	7.8 C.Y.
TOTAL CLASS A CONCRETE		29.7 C.Y.

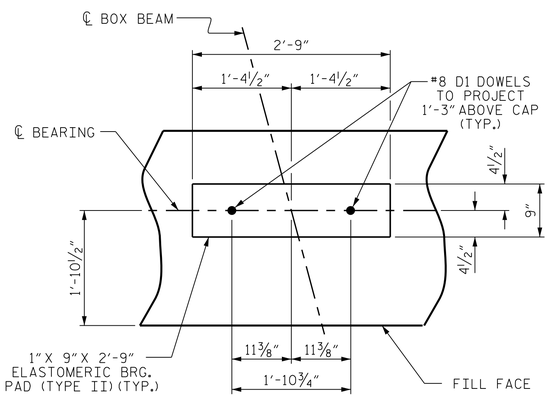

DETAIL "A"

(END BENT No. 1 SHOWN, END BENT No. 2 SIMILAR BY ROTATION)

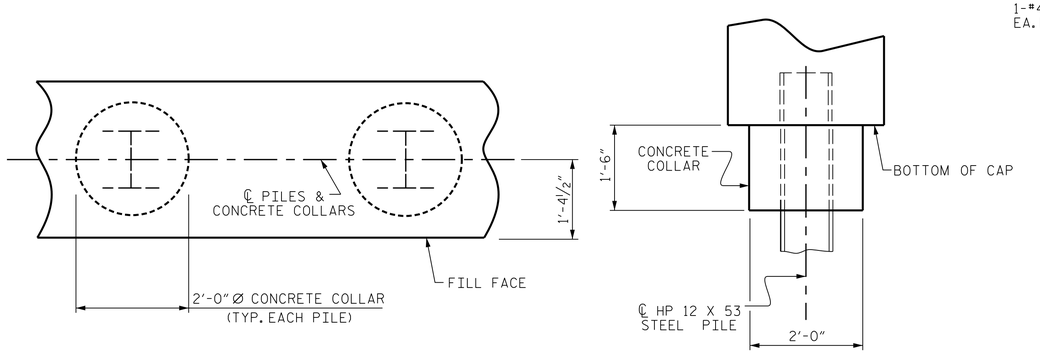

PLAN

ELEVATION

CORROSION PROTECTION FOR STEEL PILES DETAIL

(END BENT No. 1 SHOWN, END BENT No. 2 SIMILAR BY ROTATION)

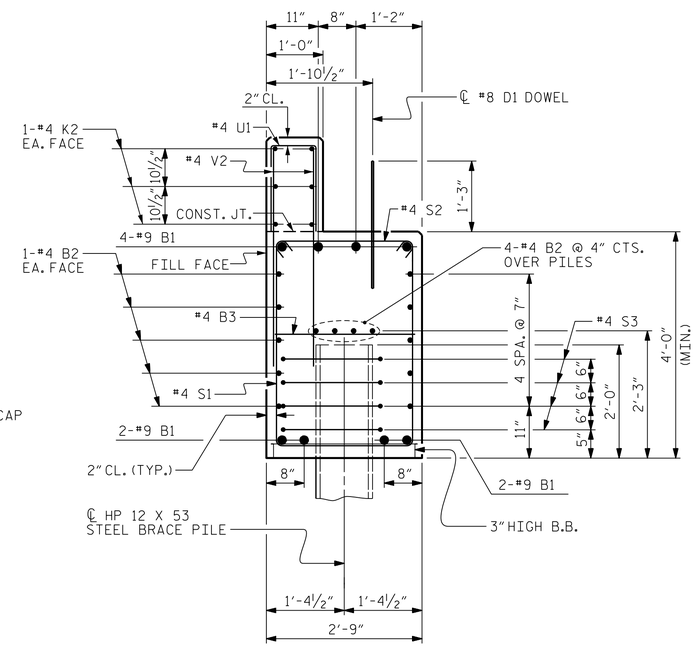

SECTION A-A

(CONCRETE COLLAR NOT SHOWN FOR CLARITY. SEE "CORROSION PROTECTION FOR STEEL PILES DETAIL.")

PROJECT NO. BP8.R021

MOORE/MONTGOMERY COUNTY

STATION: 16+50.00 -L-

SHEET 4 OF 4

STATE OF NORTH CAROLINA
DEPARTMENT OF TRANSPORTATION
RALEIGH

SUBSTRUCTURE

END BENT No. 1 & 2 DETAILS

NORTH CAROLINA PROFESSIONAL SEAL 24939 ENGINEER BYRON E. ATKINSON

12/18/2024

DOCUMENT NOT CONSIDERED FINAL UNLESS ALL SIGNATURES COMPLETED

MI ENGINEERING
1011 SCHAUB DRIVE, SUITE 100
RALEIGH, NC 27606
(919) 851-6606
FIRM PE NUMBER : P-0671

REVISIONS						
NO.	BY:	DATE:	NO.	BY:	DATE:	
1			3			
2			4			

SHEET NO. S-17

TOTAL SHEETS 19

DRAWN BY :	B.E. LANNING	DATE :	12/2024
CHECKED BY :	B.E. ATKINSON	DATE :	12/2024
DESIGN ENGINEER OF RECORD :	B.E. ATKINSON	DATE :	12/2024

12/18/2024
2:53:38 PM
User: blanning
Filename: N:\NC Bridges\M21021_CH Eng_Moore 26 Br. Rep\BP8R021\Structures\401_033_BP8R021_SMU_EB4_620026.dgn

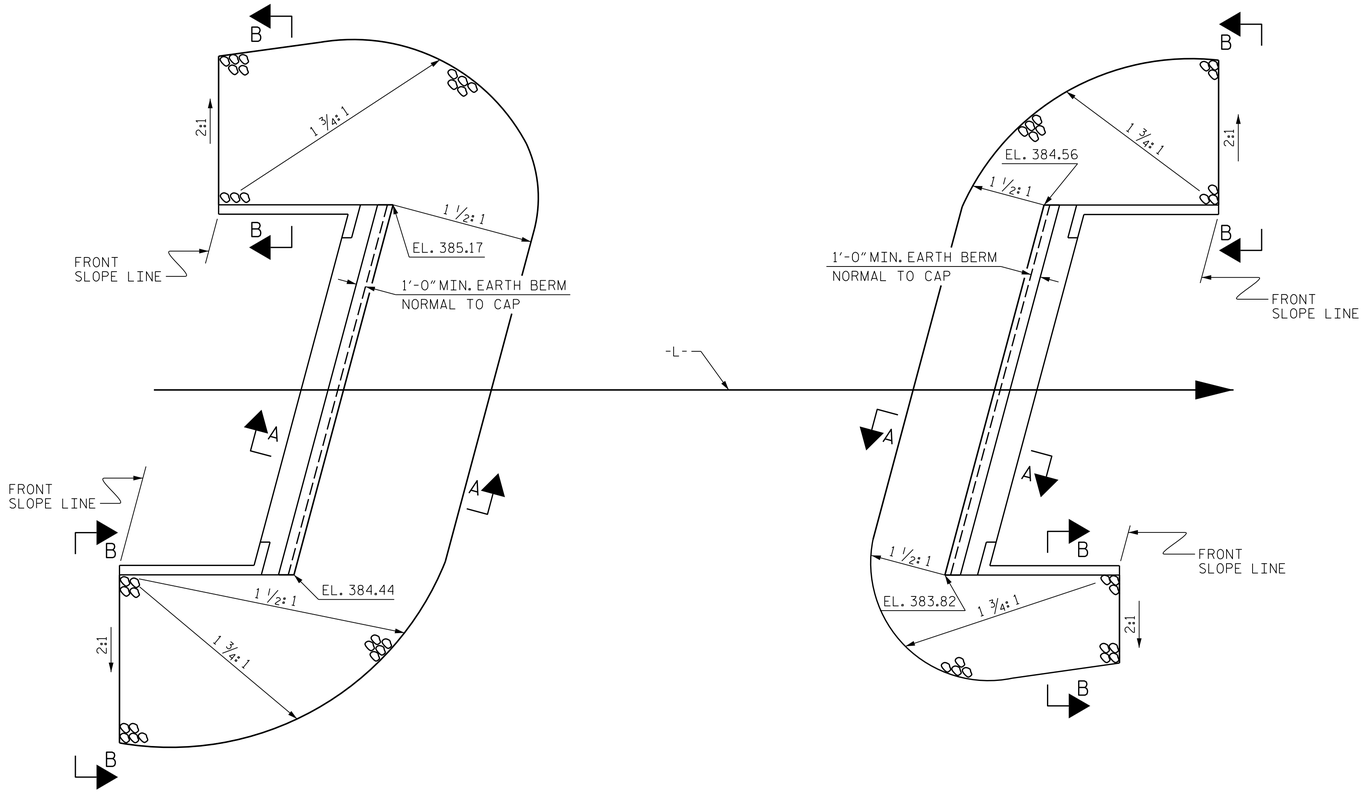

END BENT 1

END BENT 2

PLAN

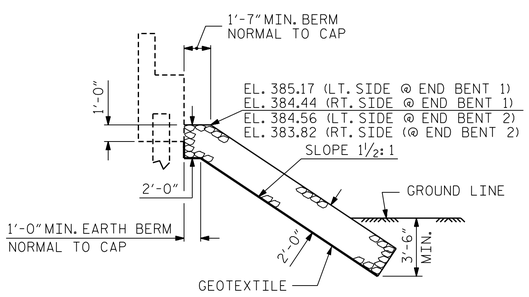

SECTION A-A

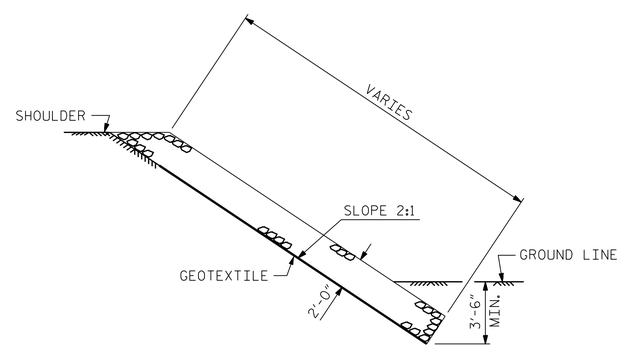

SECTION B-B

ESTIMATED QUANTITIES		
BRIDGE @ STA. 16+50.00 -L-	RIP RAP CLASS II (2'-0" THICK)	GEOTEXTILE FOR DRAINAGE
	TONS	SQUARE YARDS
END BENT 1	216	240
END BENT 2	132	146
TOTALS	348	386

PROJECT NO. BP8.R021
MOORE/MONTGOMERY COUNTY
STATION: 16+50.00 -L-

STATE OF NORTH CAROLINA
DEPARTMENT OF TRANSPORTATION
RALEIGH

RIP RAP DETAILS

NORTH CAROLINA PROFESSIONAL SEAL 24939 ENGINEER BYRON E. ATKINSON
12/18/2024

DOCUMENT NOT CONSIDERED FINAL UNLESS ALL SIGNATURES COMPLETED

MI ENGINEERING
1011 SCHAUB DRIVE, SUITE 100
RALEIGH, NC 27606
(919) 851-6606
FIRM PE NUMBER : P-0671

REVISIONS						
NO.	BY:	DATE:	NO.	BY:	DATE:	
1			3			
2			4			

SHEET NO. S-18
TOTAL SHEETS 19

DRAWN BY : B.E. LANNING DATE : 12/2024
CHECKED BY : B.E. ATKINSON DATE : 12/2024
DESIGN ENGINEER OF RECORD : B.E. ATKINSON DATE : 12/2024

12/18/2024
2:53:39 PM
User: blanning
Filename: N:\NC Bridges\M21021_CH Eng_Moore 26 Br. Repl\BP8R021\Structures\401_035_BP8R021_SMU_RR1_620026.dgn

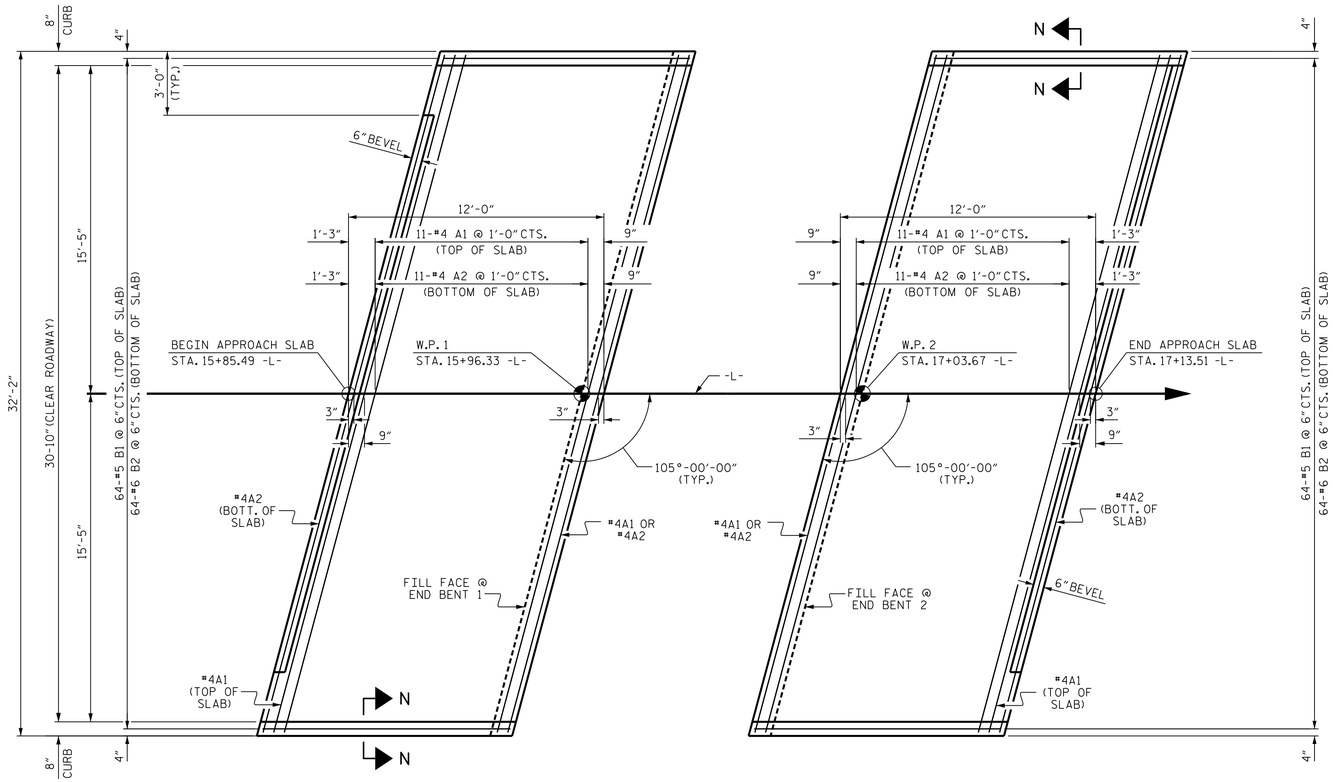

PLAN @ END BENT 1

PLAN @ END BENT 2

DIMENSIONS SHOWN ARE TYPICAL FOR BOTH APPROACH SLABS

NOTES

FOR BRIDGE APPROACH FILL, SEE ROADWAY PLANS.

AREA BETWEEN THE WINGWALL AND APPROACH SLAB SHALL BE GRADED TO DRAIN THE WATER AWAY FROM THE FILL FACE OF THE BRIDGE AND SHALL BE PAVED. SEE ROADWAY PLANS.

APPROACH SLAB GROOVING IS NOT REQUIRED.

BILL OF MATERIAL

APPROACH SLAB AT EB 1

BAR	NO.	SIZE	TYPE	LENGTH	WEIGHT
✱A1	13	#4	STR	32'-11"	286
A2	13	#4	STR	32'-11"	286
✱B1	64	#5	STR	11'-1"	740
B2	64	#6	STR	11'-7"	1113
REINFORCING STEEL				LBS.	1399
✱EPOXY COATED REINFORCING STEEL				LBS.	1026
CLASS AA CONCRETE				C.Y.	17.0

APPROACH SLAB AT EB 2

BAR	NO.	SIZE	TYPE	LENGTH	WEIGHT
✱A1	13	#4	STR	32'-11"	286
A2	13	#4	STR	32'-11"	286
✱B1	64	#5	STR	11'-1"	740
B2	64	#6	STR	11'-7"	1113
REINFORCING STEEL				LBS.	1399
✱EPOXY COATED REINFORCING STEEL				LBS.	1026
CLASS AA CONCRETE				C.Y.	17.0

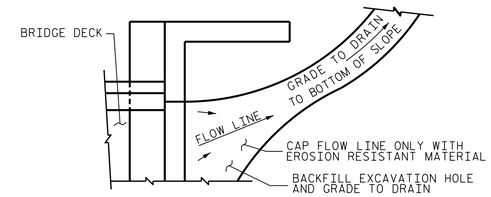

NOTE: IF THE APPROACH SLAB IS NOT CONSTRUCTED IMMEDIATELY AFTER THE BACKFILLING OF THE END BENT EXCAVATION, GRADE TO DRAIN TO THE BOTTOM OF THE SLOPE AND PROVIDE EROSION RESISTANT MATERIAL, SUCH AS FIBERGLASS ROVING OR AS DIRECTED BY THE ENGINEER TO PREVENT SOIL EROSION AND TO PROTECT THE AREA ADJACENT TO THE STRUCTURE. THE CONTRACTOR WILL BE REQUIRED TO REMOVE THESE MATERIALS PRIOR TO CONSTRUCTION OF THE APPROACH SLAB.

SPLICE LENGTHS

BAR SIZE	EPOXY COATED	UNCOATED
#4	1'-11"	1'-7"
#5	2'-5"	2'-0"
#6	3'-7"	2'-5"

TEMPORARY DRAINAGE DETAIL

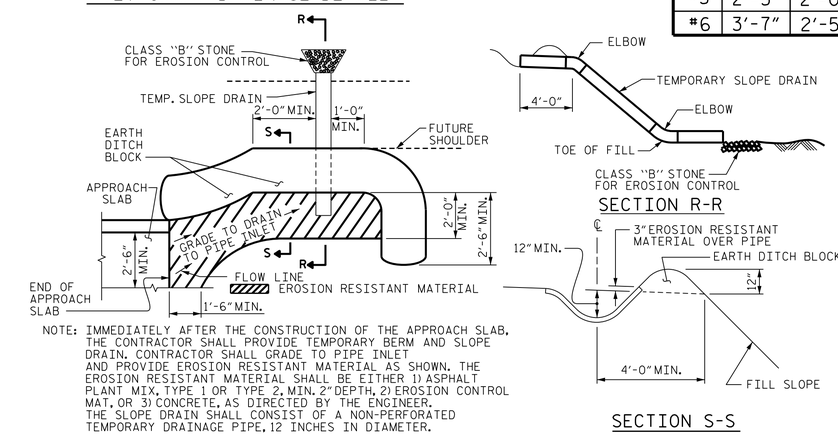

NOTE: IMMEDIATELY AFTER THE CONSTRUCTION OF THE APPROACH SLAB, THE CONTRACTOR SHALL PROVIDE TEMPORARY BERM AND SLOPE DRAIN. CONTRACTOR SHALL GRADE TO PIPE INLET AND PROVIDE EROSION RESISTANT MATERIAL AS SHOWN. THE EROSION RESISTANT MATERIAL SHALL BE EITHER 1) ASPHALT PLANT MIX, TYPE 1 OR TYPE 2, MIN. 2" DEPTH, 2) EROSION CONTROL MAT, OR 3) CONCRETE, AS DIRECTED BY THE ENGINEER. THE SLOPE DRAIN SHALL CONSIST OF A NON-PERFORATED TEMPORARY DRAINAGE PIPE, 12 INCHES IN DIAMETER.

PLAN VIEW

TEMPORARY BERM AND SLOPE DRAIN DETAILS

(TO BE USED WHEN SHOULDER BERM GUTTER IS REQUIRED)

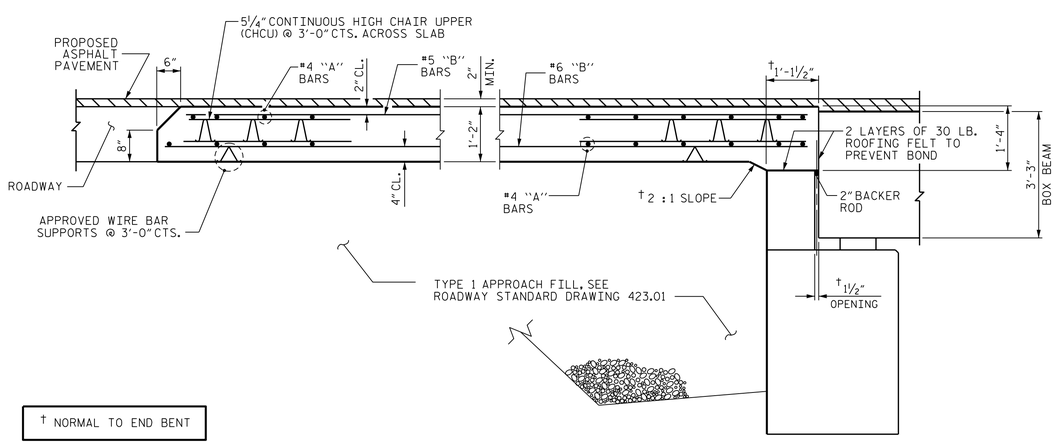

† NORMAL TO END BENT

SECTION THRU SLAB

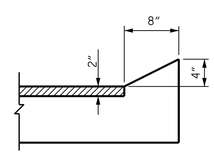

SECTION N-N

CURB DETAILS

PROJECT NO. BP8.R021

MOORE/MONTGOMERY COUNTY

STATION: 16+50.00 -L-

NORTH CAROLINA PROFESSIONAL SEAL 24939 ENGINEER BYRON E. ATKINSON

12/18/2024

DOCUMENT NOT CONSIDERED FINAL UNLESS ALL SIGNATURES COMPLETED

MI ENGINEERING
1011 SCHAUB DRIVE, SUITE 100
RALEIGH, NC 27606
(919) 851-6606
FIRM PE NUMBER : P-0671

STATE OF NORTH CAROLINA
DEPARTMENT OF TRANSPORTATION
RALEIGH

BRIDGE APPROACH SLAB FOR PRESTRESSED CONCRETE BOX BEAM UNIT (SUB-REGIONAL TIER) 105° SKEW

REVISIONS								SHEET NO.
NO.	BY:	DATE:	NO.	BY:	DATE:			S-19
1			3					TOTAL SHEETS
2			4					19

DRAWN BY : B.E. LANNING DATE : 12/2024
CHECKED BY : B.E. ATKINSON DATE : 12/2024
DESIGN ENGINEER OF RECORD : B.E. ATKINSON DATE : 12/2024

12/18/2024
2:53:41 PM
User: blanning
Filename: N:\NC Bridges\M21021_CH Eng_Moore 26 Br. Repl\BP8R021\Structures\401_037_BP8R021_SMU_BAS1_620026.dgn

STANDARD NOTES

DESIGN DATA:

SPECIFICATIONS	A.A.S.H.T.O. (CURRENT)
LIVE LOAD	SEE PLANS
IMPACT ALLOWANCE	SEE A.A.S.H.T.O.
STRESS IN EXTREME FIBER OF STRUCTURAL STEEL - AASHTO M270 GRADE 36	20,000 LBS. PER SQ. IN.
- AASHTO M270 GRADE 50W	27,000 LBS. PER SQ. IN.
- AASHTO M270 GRADE 50	27,000 LBS. PER SQ. IN.
REINFORCING STEEL IN TENSION - GRADE 60	24,000 LBS. PER SQ. IN.
CONCRETE IN COMPRESSION	1,200 LBS. PER SQ. IN.
CONCRETE IN SHEAR	SEE A.A.S.H.T.O.
STRUCTURAL TIMBER - TREATED OR UNTREATED EXTREME FIBER STRESS	1,800 LBS. PER SQ. IN.
COMPRESSION PERPENDICULAR TO GRAIN OF TIMBER	375 LBS. PER SQ. IN.
EQUIVALENT FLUID PRESSURE OF EARTH	30 LBS. PER CU. FT. (MINIMUM)

MATERIAL AND WORKMANSHIP:

EXCEPT AS MAY OTHERWISE BE SPECIFIED ON PLANS OR IN THE SPECIAL PROVISIONS, ALL MATERIAL AND WORKMANSHIP SHALL BE IN ACCORDANCE WITH THE 2024 "STANDARD SPECIFICATIONS FOR ROADS AND STRUCTURES" OF THE N. C. DEPARTMENT OF TRANSPORTATION.

STEEL SHEET PILING FOR PERMANENT OR TEMPORARY APPLICATIONS SHALL BE HOT ROLLED.

CONCRETE:

UNLESS OTHERWISE REQUIRED ON PLANS, CLASS A CONCRETE SHALL BE USED FOR ALL PORTIONS OF ALL STRUCTURES WITH THE EXCEPTION THAT: CLASS AA CONCRETE SHALL BE USED IN BRIDGE SUPERSTRUCTURES, ABUTMENT BACKWALLS, AND APPROACH SLABS; AND CLASS B CONCRETE SHALL BE USED FOR SLOPE PROTECTION AND RIP RAP.

CONCRETE CHAMFERS:

UNLESS OTHERWISE NOTED ON THE PLANS, ALL EXPOSED CORNERS ON STRUCTURES SHALL BE CHAMFERED ¾" WITH THE FOLLOWING EXCEPTIONS: TOP CORNERS OF CURBS MAY BE ROUNDED TO 1½" RADIUS WHICH IS BUILT INTO CURB FORMS; CORNERS OF TRANSVERSE FLOOR EXPANSION JOINTS SHALL BE ROUNDED WITH A ¼" FINISHING TOOL UNLESS OTHERWISE REQUIRED ON PLANS; AND CORNERS OF EXPANSION JOINTS IN THE ROADWAY FACES AND TOPS OF CURBS AND SIDEWALKS SHALL BE ROUNDED TO A ¼" RADIUS WITH A FINISHING STONE OR TOOL UNLESS OTHERWISE REQUIRED ON PLANS.

DOWELS:

DOWELS WHEN INDICATED ON PLANS AS FOR CULVERT EXTENSIONS, SHALL BE EMBEDDED AT LEAST 12" INTO THE OLD CONCRETE AND GROUTED INTO PLACE WITH 1:2 CEMENT MORTAR.

ALLOWANCE FOR DEAD LOAD DEFLECTION, SETTLEMENT, ETC. IN CASTING SUPERSTRUCTURES:

BRIDGES SHALL BE BUILT ON THE GRADE OR VERTICAL CURVE SHOWN ON PLANS. SLABS, CURBS AND PARAPETS SHALL CONFORM TO THE GRADE OR CURVE.

ALL DIMENSIONS WHICH ARE GIVEN IN SECTION AND ARE AFFECTED BY DEAD LOAD DEFLECTIONS ARE DIMENSIONS AT CENTER LINE OF BEARING UNLESS OTHERWISE NOTED ON PLANS. IN SETTING FORMS FOR STEEL BEAM BRIDGES AND PRESTRESSED CONCRETE GIRDER BRIDGES, ADJUSTMENTS SHALL BE MADE DUE TO THE DEAD LOAD DEFLECTIONS FOR THE ELEVATIONS SHOWN. WHERE BLOCKS ARE SHOWN OVER BEAMS FOR BUILDING UP TO THE SLAB, THE VERTICAL DIMENSIONS OF THE BLOCKS SHALL BE ADJUSTED BETWEEN BEARINGS TO COMPENSATE FOR DEAD LOAD DEFLECTIONS, VERTICAL CURVE ORDINATE, AND ACTUAL BEAM CAMBER. WHERE BOTTOM OF SLAB IS IN LINE WITH BOTTOM OF TOP FLANGES, DEPTH OF SLAB BETWEEN BEARINGS SHALL BE ADJUSTED TO COMPENSATE FOR DEAD LOAD DEFLECTION, VERTICAL CURVE ORDINATE, AND ACTUAL BEAM CAMBER.

IN SETTING FALSEWORK AND FORMS FOR REINFORCED CONCRETE SPANS, AN ALLOWANCE SHALL BE MADE FOR DEAD LOAD DEFLECTIONS, SETTLEMENT OF FALSEWORK, AND PERMANENT CAMBER WHICH SHALL BE PROVIDED FOR IN ADDITION TO THE ELEVATIONS SHOWN. AFTER REMOVAL OF THE FALSEWORK, THE FINISHED STRUCTURES SHALL CONFORM TO THE PROFILE AND ELEVATIONS SHOWN ON THE PLANS AND CONSTRUCTION ELEVATIONS FURNISHED BY THE ENGINEER.

DETAILED DRAWINGS FOR FALSEWORK OR FORMS FOR BRIDGE SUPERSTRUCTURE AND ANY STRUCTURE OR PARTS OF A STRUCTURE AS NOTED ON THE PLANS SHALL BE SUBMITTED TO THE ENGINEER FOR APPROVAL BEFORE CONSTRUCTION OF THE FALSEWORK OR FORMS IS STARTED.

REINFORCING STEEL:

ALL REINFORCING STEEL SHALL BE DEFORMED. DIMENSIONS RELATIVE TO PLACEMENT OF REINFORCING ARE TO CENTERS OF BARS UNLESS OTHERWISE INDICATED IN THE PLANS. DIMENSIONS ON BAR DETAILS ARE TO CENTERS OF BARS OR ARE OUT TO OUT AS INDICATED ON PLANS.

WIRE BAR SUPPORTS SHALL BE PROVIDED FOR REINFORCING STEEL WHERE INDICATED ON THE PLANS. WHEN BAR SUPPORT PIECES ARE PLACED IN CONTINUOUS LINES, THEY SHALL BE SO PLACED THAT THE ENDS OF THE SUPPORTING WIRES SHALL BE LAPPED TO LOCK LEGS ON ADJOINING PIECES.

STRUCTURAL STEEL:

AT THE CONTRACTOR'S OPTION, HE MAY SUBSTITUTE ⅞" Ø SHEAR STUDS FOR THE ¾" Ø STUDS SPECIFIED ON THE PLANS. THIS SUBSTITUTION SHALL BE MADE AT THE RATE OF 3 - ⅞" Ø STUDS FOR 4 - ¾" Ø STUDS, AND STUD SPACING CHANGES SHALL BE MADE AS NECESSARY TO PROVIDE THE SAME EQUIVALENT NUMBER OF ⅞" Ø STUDS ALONG THE BEAM AS SHOWN FOR ¾" Ø STUDS BASED ON THE RATIO OF 3 - ⅞" Ø STUDS FOR 4 - ¾" Ø STUDS. STUDS OF THE LENGTH SPECIFIED ON THE PLANS MUST BE PROVIDED. THE MAXIMUM SPACING SHALL BE 2'-0".

EXCEPT AT THE INTERIOR SUPPORTS OF CONTINUOUS BEAMS WHERE THE COVER PLATE IS IN CONTACT WITH BEARING PLATE, THE CONTRACTOR MAY, AT HIS OPTION, SUBSTITUTE FOR THE COVER PLATES DESIGNATED ON THE PLANS COVER PLATES OF THE EQUIVALENT AREA PROVIDED THESE PLATES ARE AT LEAST 5/16" IN THICKNESS AND DO NOT EXCEED A WIDTH EQUAL TO THE FLANGE WIDTH LESS 2" OR A THICKNESS EQUAL TO 2 TIMES THE FLANGE THICKNESS. THE SIZE OF FILLET WELDS SHALL CONFORM TO THE REQUIREMENTS OF THE CURRENT ANSI/AASHTO/AWS "BRIDGE WELDING CODE". ELECTROSLAG WELDING WILL NOT BE PERMITTED.

WITH THE SOLE EXCEPTION OF EDGES AT SURFACES WHICH BEAR ON OTHER SURFACES, ALL SHARP EDGES AND ENDS OF SHAPES AND PLATES SHALL BE SLIGHTLY ROUNDED BY SUITABLE MEANS TO A RADIUS OF APPROXIMATELY 1/16 INCH OR EQUIVALENT FLAT SURFACE AT A SUITABLE ANGLE PRIOR TO PAINTING, GALVANIZING, OR METALLIZING.

HANDRAILS AND POSTS:

METAL STANDARDS AND FACES OF THE CONCRETE END POSTS FOR THE METAL RAIL SHALL BE SET NORMAL TO THE GRADE OF THE CURB, UNLESS OTHERWISE SHOWN ON PLANS. THE METAL RAIL AND TOPS OF CONCRETE POSTS USED WITH THE ALUMINUM RAIL SHALL BE BUILT PARALLEL TO THE GRADE OF THE CURB.

METAL HANDRAILS SHALL BE IN ACCORDANCE WITH THE PLANS. RAILS SHALL BE AS MANUFACTURED FOR BRIDGE RAILING. CASTINGS SHALL BE OF A UNIFORM APPEARANCE. FINS AND OTHER DEFORMATIONS RESULTING FROM CASTING OR OTHERWISE SHALL BE REMOVED IN A MANNER SO THAT A UNIFORM COLORING OF THE COMPLETED CASTING SHALL BE OBTAINED. CASTINGS WITH DISCOLORATIONS OR OF NON-UNIFORM COLORING WILL NOT BE ACCEPTED. CERTIFIED MILL REPORTS ARE REQUIRED FOR METAL RAILS AND POSTS.

SPECIAL NOTES:

GENERALLY, IN CASE OF DISCREPANCY, THIS STANDARD SHEET OF NOTES SHALL GOVERN OVER THE SPECIFICATIONS, BUT THE REMAINDER OF THE PLANS SHALL GOVERN OVER NOTES HEREON, AND SPECIAL PROVISIONS SHALL GOVERN OVER ALL. SEE SPECIFICATIONS ARTICLE 105-4.

ENGLISH